This manual should be considered a permanent part of the motorcycle and should remain with the motorcycle when it is resold.

This publication includes the latest production information available before printing.
Honda Motor Co., Ltd. reserves the right to make changes at any time without notice and without incurring any obligation.

No part of this publication may be reproduced without written permission.

The vehicle pictured on the front cover may not match your vehicle.

© Honda Motor Co., Ltd. 2006

# 2007
# Honda XR650R
# OWNER'S MANUAL

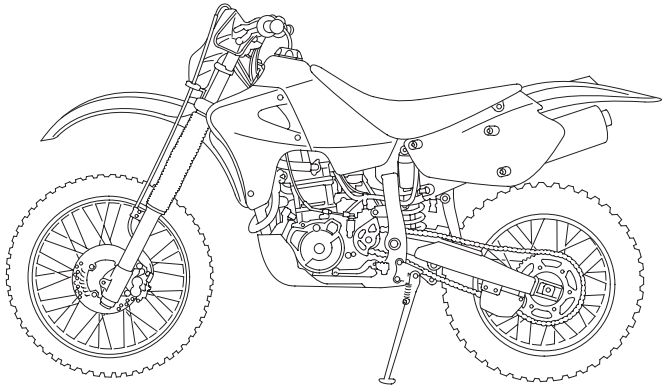

**FOR OFF-ROAD USE ONLY**

This vehicle is designed and manufactured for off-road use only.

USA only:

It conforms to US EPA Noise Emission regulations, but does not conform to Federal Motor Vehicle Safety Standards or US EPA On Highway Exhaust Emission regulations, and operation on public streets, roads, or highways is illegal. The vehicle is equipped with a USDA qualified spark arrester. Obey local laws and regulations.

It conforms to US EPA and California exhaust emission regulations for off-road motorcycles.

# A Few Words About Safety

Your safety, and the safety of others, is very important. And operating this motorcycle safely is an important responsibility.

To help you make informed decisions about safety, we have provided operating procedures and other information on labels and in this manual. This information alerts you to potential hazards that could hurt you or others.

Of course, it is not practical or possible to warn you about all hazards associated with operating or maintaining a motorcycle. You must use your own good judgment.

You will find important safety information in a variety of forms, including:

- **Safety Labels** — on the motorcycle.
- **Safety Messages** — preceded by a safety alert symbol ⚠ and one of three signal words: **DANGER, WARNING,** or **CAUTION.**

These signal words mean:

# A Few Words About Safety

**⚠ DANGER** — **You WILL be KILLED or SERIOUSLY HURT if you don't follow instructions.**

**⚠ WARNING** — **You CAN be KILLED or SERIOUSLY HURT if you don't follow instructions.**

**⚠ CAUTION** — **You CAN be HURT if you don't follow instructions.**

- **Safety Headings** — such as Important Safety Reminders or Important Safety Precautions.
- **Safety Section** — such as Motorcycle Safety.
- **Instructions** — how to use this motorcycle correctly and safely.

This entire book is filled with important safety information — please read it carefully.

# Contents

These pages give an overview of the contents of your owner's manual. The first page of each section lists the topics covered in that section.

**Introduction**

**Motorcycle Safety ..... 1**
Important safety information, precautions about loading, accessories, and modifications, and the location of safety labels.

**Operating Controls ..... 11**
The location, function, and operation of the throttle, brakes, clutch, and other basic controls.

**Before Riding ..... 21**
The importance of wearing a helmet and other protective gear, plus how to make sure you and your motorcycle are ready to ride.

**Basic Operation & Riding ..... 27**
How to start and stop the engine, shift gears, and brake. Also, riding precautions.

**Servicing Your Honda ..... 41**
Why your motorcycle needs regular maintenance, what you need to know before servicing your Honda, a maintenance schedule, and instructions for specific maintenance items.

# Contents

**Tips** ..... **137**
How to transport and store your motorcycle, and how to be an environmentally-responsible rider.

**Taking Care of the Unexpected** ..... **147**
What to do if you have a flat tire, your engine won't start, etc.

**Technical Information** ..... **155**
ID numbers, technical specifications, and other technical facts.

**Consumer Information** ..... **171**
Information on warranties and how to get Honda service manuals.

**Table of Contents** ..... **182**
Sequential listing of topics in this owner's manual.

**Index** ..... **186**

**Quick Reference**
Handy facts about fuel, engine oil, tire sizes, and air pressures.

# Introduction

Congratulations on choosing your Honda off-road motorcycle.

When you own a Honda, you're part of a worldwide family of satisfied customers—people who appreciate Honda's reputation for building quality into every product.

Your Honda was designed as a recreational motorcycle for off-road use by one rider only.

Before riding, take time to get acquainted with your motorcycle and how it works. To protect your investment, we urge you to take responsibility for keeping your motorcycle well maintained. Scheduled service is a must, of course. But it's just as important to observe the break-in guidelines, and perform all the pre-ride and other periodic checks detailed in this manual.

We also recommend that you read the owner's manual before you ride. It's full of facts, instructions, safety information, and helpful tips. To make it easy to use, the manual contains a table of contents, a detailed list of topics at the beginning of each section, and an index at the back of the book.

As you read this manual, you will find information that is preceded by a NOTICE symbol. This information is intended to help you avoid damage to your Honda, other property, or the environment.

Read the Warranties Booklet (page 175) thoroughly so you understand the coverages that protect your new Honda and are aware of your rights and responsibilities.

Whenever you ride, tread lightly. By staying on established trails and riding only in approved areas, you help protect the environment and keep off-road riding areas open for the future.

If you have any questions, or if you ever need a special service or repairs, remember that your Honda dealer knows your motorcycle best and is dedicated to your complete satisfaction.

Please report any change of address or ownership to your Honda dealer so we will be able to contact you concerning important production information.

You may also want to visit our website at www.honda.com.

Happy riding!

California Proposition 65 Warning

**WARNING:** This product contains or emits chemicals known to the State of California to cause cancer and birth defects or other reproductive harm.

# Motorcycle Safety

This section presents some of the most important information and recommendations to help you ride your motorcycle safely. Please take a few moments to read these pages. This section also includes information about the location of safety labels on your motorcycle.

Important Safety Information .....2
Loading, Accessories & Modifications .....5
Loading .....5
Accessories & Modifications.....7
Safety Labels.....9

# Important Safety Information

Your motorcycle can provide many years of service and pleasure—if you take responsibility for your own safety and understand the challenges you can meet while riding.

There is much that you can do to protect yourself when you ride. You'll find many helpful recommendations throughout this manual. The following are a few that we consider most important.

**Always Wear a Helmet**
It's a proven fact: helmets significantly reduce the number and severity of head injuries. So always wear an approved motorcycle helmet. We also recommend that you wear eye protection, sturdy boots, gloves, and other protective gear (page 22 ).

**Never Carry a Passenger**
Your motorcycle is designed for one person only. There are no handholds, footrests, or seat for a second person—so never carry a passenger. A passenger could interfere with your ability to move around to maintain your balance and control of the motorcycle.

**Ride Off-Road Only**
Your motorcycle is designed and manufactured for off-road use only. The tires are not made for pavement, and the motorcycle does not have turn signals and other features required for use on public roads. If you need to cross a paved or public road, get off and walk your motorcycle across.

**Take Time to Learn and Practice**
Developing off-road riding skills is a gradual, step-by-step process. Start by practicing at low speeds in a safe area and slowly build your skills. Personal instruction from an experienced rider can also be valuable.

If you need assistance, ask your dealer about riding groups in your area.

Also be sure to read the *Tips & Practice Guide for the Off-Highway Motorcyclist* booklet that came with your motorcycle (USA only).

**Be Alert for Off-Road Hazards**
The terrain can present a variety of challenges when you ride off-road. Continually ‘‘read’’ the terrain for unexpected turns, drop-offs, rocks, ruts, and other hazards. Always keep your speed low enough to allow time to see and react to hazards.

**Ride within Your Limits**
Pushing limits is another major cause of motorcycle accidents. Never ride beyond your personal abilities or faster than conditions warrant. Remember that alcohol, drugs, fatigue, and inattention can significantly reduce your ability to make good judgments and ride safely.

**Don’t Drink and Ride**
Alcohol and riding don’t mix. Even one drink can reduce your ability to respond to changing conditions, and your reaction time gets worse with every additional drink. So don’t drink and ride, and don’t let your friends drink and ride either.

**Keep Your Honda in Safe Condition**
It’s important to keep your motorcycle properly maintained and in safe riding condition. Having a breakdown can be difficult, especially if you are stranded off-road far from your base. To help avoid problems, inspect your motorcycle before every ride and perform all recommended maintenance.

# Loading, Accessories & Modifications

Your Honda was designed as a rider-only motorcycle. It was not designed to carry a passenger or cargo. A passenger or cargo could interfere with your ability to move around to maintain your balance and control of the motorcycle.

In addition, exceeding the weight limits or carrying an unbalanced load can seriously affect your motorcycle's handling, braking, and stability. Adding accessories or making modifications that change this motorcycle's design and performance can also make it unsafe. Also, the weight of any accessories will reduce the maximum load the motorcycle can carry.

More specific information on load limits, accessories, and modifications follows.

## Loading

How much weight you put on your motorcycle, and how you load it, are important to your safety. If you decide to carry cargo, you should be aware of the following information.

**⚠ WARNING**

Overloading or carrying a passenger can cause a crash and you can be seriously hurt or killed.

Follow all load limits and other loading guidelines in this manual.

# Loading, Accessories & Modifications

**Load Limits**
Following are the load limits for your motorcycle:

**Maximum weight capacity**
= 220 lbs (100 kg)
Includes the weight of the rider and any accessories.

**Loading Guidelines**
As discussed on page 5, we recommend that you do not carry any cargo on this motorcycle. However, if you decide to carry cargo, ride at reduced speeds and follow these common-sense guidelines:

- Keep cargo small and light. Make sure it cannot easily be caught on brush or other objects, and that it does not interfere with your ability to shift position to maintain balance and stability.
- Place weight as close to the center of the motorcycle as possible.
- Do not attach large or heavy items (such as a sleeping bag or tent) to the handlebar, fork, or front fender.
- Make sure that all cargo is tied down securely.
- Never exceed the maximum weight limit.
- Check that both tires are inflated properly.

## Accessories & Modifications

Modifying your motorcycle or using non-Honda accessories can make your motorcycle unsafe.

Before you consider making any modifications or adding an accessory, be sure to read the following information.

**⚠ WARNING**

Improper accessories or modifications can cause a crash in which you can be seriously hurt or killed.

Follow all instructions in this owner's manual regarding modifications and accessories.

**Accessories**

We strongly recommend that you use only genuine Honda accessories that have been specifically designed and tested for your motorcycle. Because Honda cannot test all other accessories, you must be personally responsible for proper selection, installation, and use of non-Honda accessories. Check with your dealer for assistance and always follow this guideline:

- Make sure the accessory does not reduce ground clearance and lean angle, limit suspension travel or steering travel, alter your riding position, or interfere with operating any controls.

# Loading, Accessories & Modifications

**Modifications**

We strongly advise you not to remove any original equipment or modify your motorcycle in any way that would change its design or operation. Such changes could seriously impair your motorcycle's handling, stability, and braking, making it unsafe to ride.

We also advise you not to make any modifications or remove any equipment (such as the USDA qualified spark arrester or emission control system components) that would make the motorcycle illegal in your area.

This page shows the locations of safety labels on your motorcycle. Some labels warn you of potential hazards that could cause serious injury. Others provide important safety information. Read these labels carefully and don't remove them.

If a label comes off or becomes hard to read, contact your Honda dealer for a replacement.

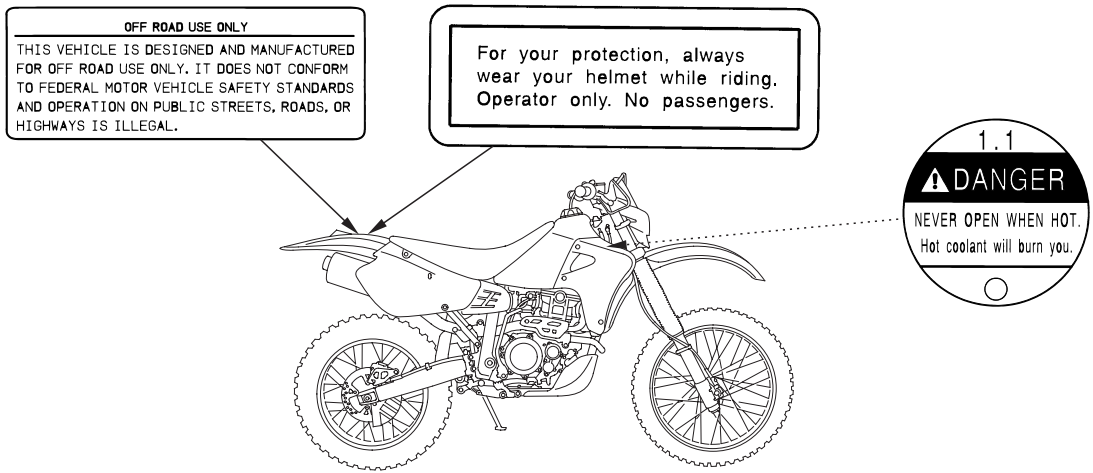

# Operating Controls

When you ride off-road, you need to operate the throttle, clutch, brakes, and other controls without stopping to look at them. Read this section carefully before you ride. It describes the location, function, and operation of all the basic controls on your motorcycle.


Operation Component Locations.....12
Fuel Valve.....15
Choke Lever.....16
Engine Stop Button.....17
Front Brake Lever.....17
Throttle.....17
Clutch Lever.....17
Shift Lever.....18
Rear Brake Pedal.....18
Kickstarter.....18
Starter Decompressor Lever.....18
Side Stand.....19
Tripmeter.....19

# Operation Component Locations

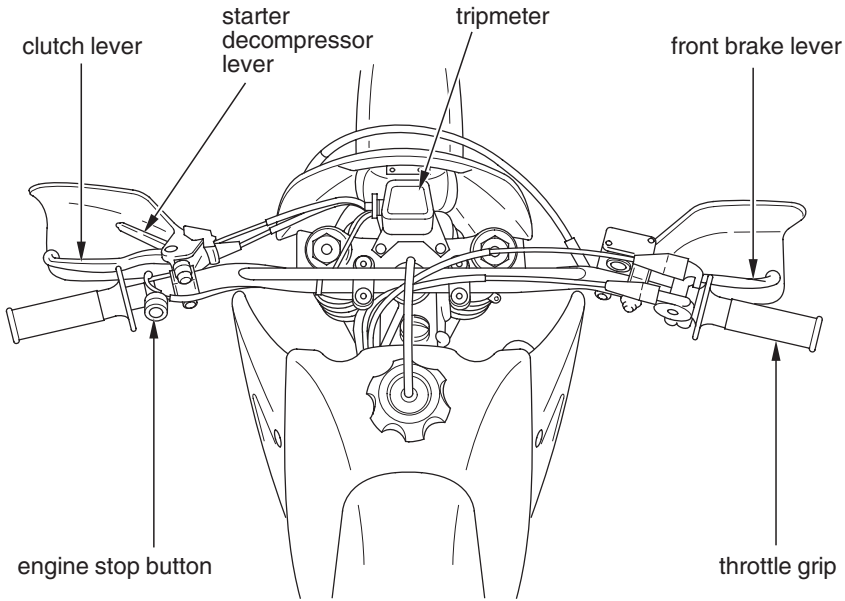

# Operation Component Locations

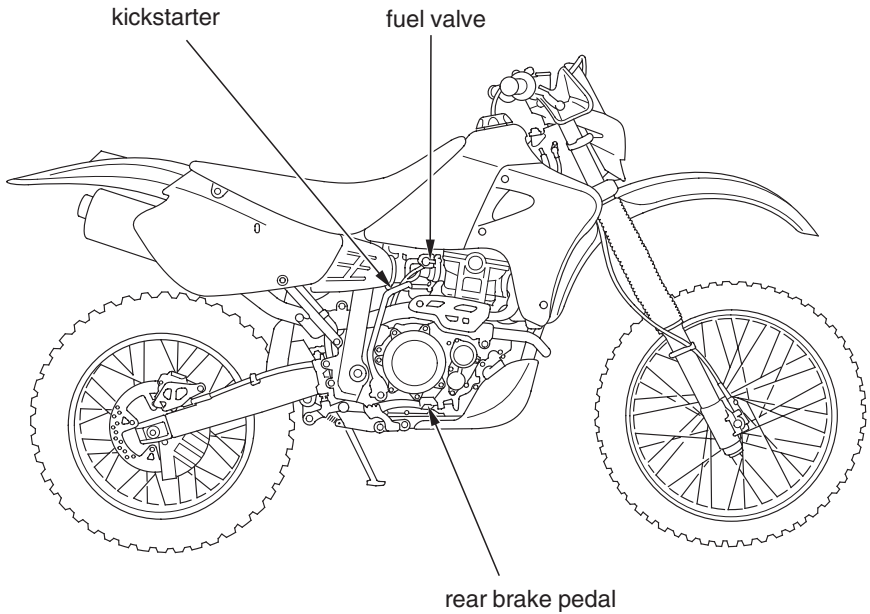

# Operation Component Locations

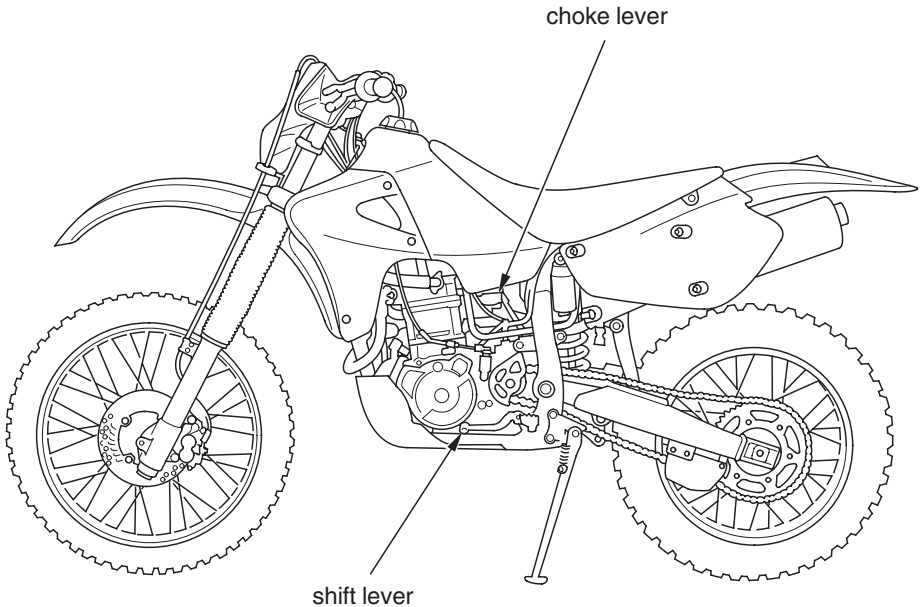

## Fuel Valve

RIGHT SIDE

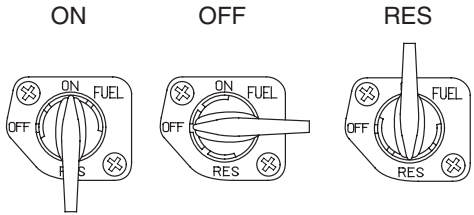


The three-way fuel valve is used to control the flow of fuel from the fuel tank to the carburetor.

ON
Turning the fuel valve ON before attempting to start the engine allows fuel to flow from the fuel tank to the carburetor.

OFF
Turning the fuel valve OFF after stopping the engine prevents the flow of fuel from the fuel tank to the carburetor.

RES
Turning the fuel valve to RES allows fuel to flow from the reserve fuel supply to the carburetor.

The reserve fuel supply is:
0.53 US gal (2.0 ℓ)

The tank should be refilled as soon as possible after switching to reserve, and the fuel valve should be returned to the ON position after refueling to avoid running out of fuel with no reserve.

## Choke Lever

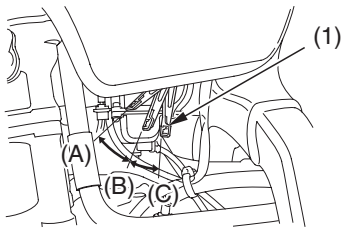


(1) choke lever

(A) fully ON
(B) detent position
(C) fully OFF

The choke lever ( 1 ) is used for starting the engine (page 29 ). The choke increases the percentage of fuel in the fuel/air mixture delivered to the engine.

ON
Used to start a cold engine with air temperature below 35°C (95°F).

DETENT
Used to warm a cold engine immediately after starting with air temperature below 35°C (95°F).

OFF
Used for normal operation, for restarting a warm engine, or starting a cold engine with air temperature above 35°C (95°F).

## Engine Stop Button

The engine stop button is used to turn the engine off during normal riding situations. To operate, push the button in and hold it in until the engine stops completely.

## Front Brake Lever

The front brake lever is used to slow or stop your motorcycle. To operate, pull the lever. For information on braking techniques, see page 37.

## Throttle

The throttle controls engine rpm (speed). To increase engine rpm, rotate the grip toward you. To reduce engine rpm, rotate the grip away from you. The throttle will automatically return to the closed position (engine idle) when you remove your hand.

## Clutch Lever

The clutch lever is used to disengage the clutch whenever you shift gears. To operate, pull the clutch lever in all the way before shifting, then slowly release it after shifting.

## Shift Lever

The shift lever is used to select the next higher or lower gear in the transmission. To operate, raise the shift lever (after pulling in the clutch lever) to engage the next higher gear or depress the shift lever to engage the next lower gear. See *Shifting Gears,* page 35.

## Rear Brake Pedal

The rear brake pedal is used to slow or stop your motorcycle. To operate, depress the pedal. For information on braking techniques, see page 37.

## Kickstarter

The kickstarter is used to start the engine. To operate, swing the kickstarter out from its stored position and depress it through its entire stroke. See *Starting Procedure,* page 29.

## Starter Decompressor Lever

The starter decompressor lever may be used if you experience starting difficulties or to help restart the engine while your motorcycle is rolling downhill. To operate, pull the lever in. See *Starter Decompressor Lever,* page 32.

## Side Stand

The side stand is used to support your motorcycle while parked (page 39). To operate, use your foot to lower the stand. Before riding, raise the stand.

## Tripmeter

FRONT

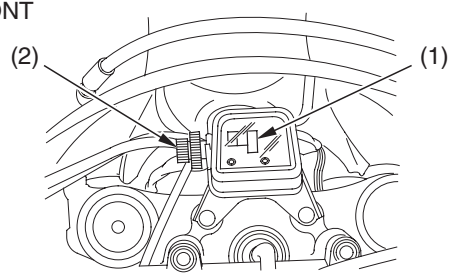


(1) tripmeter
(2) tripmeter reset knob

FRONT

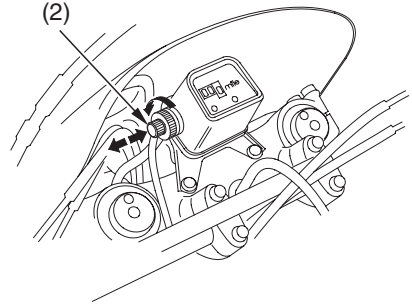


(2) tripmeter reset knob

The tripmeter (1) is used to record the distance traveled (USA: miles, Canada: kilometers) per trip or section of route.
To operate, pull the tripmeter reset knob (2) out (OFF) and turn it until the meter shows all zeros (0), then push the knob in (ON).

# Before Riding

Before each ride, you need to make sure you and your Honda are both ready to ride. To help get you prepared, this section discusses how to evaluate your riding readiness, and how to perform the recommended pre-ride inspection of your Honda.

Are You Ready to Ride? .....22
Protective Apparel .....22
Is Your Motorcycle Ready to Ride? .....24
Pre-ride Inspection .....24

# Are You Ready to Ride?

Before you ride your motorcycle for the first time, we strongly recommend that you:

- read this owner's manual
- make sure you understand all the safety messages
- know how to operate all the controls

Before each ride, we also suggest that you make sure you:

- are in good physical and mental condition
- are free of alcohol and drugs
- are wearing an approved motorcycle helmet (with chin strap tightened securely), eye protection, and other protective clothing

## Protective Apparel

For your safety, we strongly recommend that you always wear an approved motorcycle helmet, eye protection, boots, gloves, long pants, and a long-sleeved jersey, shirt, or jacket whenever you ride. Although complete protection is not possible, wearing the proper gear can reduce the chance of injury when you ride. Following are suggestions to help you choose the proper gear.

**⚠ WARNING**

Not wearing a helmet increases the chance of serious injury or death in a crash.

Be sure you always wear a helmet, eye protection and other protective apparel when you ride.

**Helmets and Eye Protection**

Your helmet is your most important piece of riding gear because it offers the best protection against head injuries. A helmet should fit your head comfortably and have a chin strap that can be tightened securely.

An open-face helmet offers some protection, but a full-face helmet offers more. Regardless of the style, look for a DOT (Department of Transportation) sticker in any helmet you buy (USA only). Always wear a face shield or goggles to protect your eyes and help your vision.

**Additional Riding Gear**

In addition to a helmet and eye protection, we also recommend:

- Sturdy off-road motorcycle boots to help protect your feet, ankles, and lower legs.
- Off-road motorcycle gloves to help protect your hands.
- Riding pants with knee and hip pads, a riding jersey with padded elbows, and a chest/shoulder protector.

# Is Your Motorcycle Ready to Ride?

Before each ride, it's important to inspect your motorcycle and make sure any problem you find is corrected. A pre-ride inspection is a must because off-road riding can be tough on a motorcycle and you don't want to have a breakdown far from help.

**⚠ WARNING**

Improperly maintaining this motorcycle or failing to correct a problem before riding can cause a crash in which you can be seriously hurt or killed.

Always perform a pre-ride inspection before every ride and correct any problems.

## Pre-ride Inspection

Check the following items before you get on the motorcycle:

| | |
|---|---|
| *Tires* | Use a gauge to check the air pressure. Adjust if needed. Also look for signs of damage or excessive wear (page 119). |
| *Spokes & Rims* | Make sure the spokes and rim locks are tight. Also check the rims for damage (page 113). |
| *Leaks* | Look under the motorcycle for signs of leaking fluids (fuel, engine oil, brake fluid). |

| | |
|---|---|
| *Engine Oil* | Check the level and add oil if needed (page 67 ). |
| *Radiator Coolant* | Check the level and add coolant if needed (page 74 ). |
| *Fuel* | Check the level and add fuel (page 61 ) if needed. Also make sure the fuel fill cap is securely fastened. |
| *Drive Chain* | Check the condition and slack. Adjust and lubricate if needed. Also check the chain guide slider and slipper for wear and replace if needed (page 124 ). |
| *Cables* | Check the cable housings for wear. Check the fittings for looseness. Replace or tighten as needed. |
| *Nuts & Bolts* | Use a wrench to make sure all accessible nuts, bolts, and fasteners are tight. |
| *Spark Plug & Cap* | Check for looseness (page 86 ). |

# Is Your Motorcycle Ready to Ride?

Check these items after you get on the motorcycle:

*Throttle* Check the freeplay and adjust if needed. Rotate the throttle to make sure it moves smoothly without sticking, and snaps shut automatically when it is released, in all steering positions (page 79 ).

*Brakes* Squeeze the front brake lever and step on the rear brake pedal to check that the controls operate normally. Check for proper freeplay (page 108 ).

*Clutch Lever* Check for smooth operation and adjust if needed (page 82).

*Headlight* Check for proper operation.

Remember, be sure to take care of any problem you find or have your Honda dealer correct it before you ride.

# Basic Operation & Riding

This section gives basic information on how to begin riding your motorcycle. It includes how to start and stop your engine, how to use the throttle, clutch, and brakes, and what to do when you're through riding.

For more advanced information—how to make turns, ride on hills, etc., see the *Tips & Practice Guide for the Off-Highway Motorcyclist* booklet that came with your Honda (USA only).

To protect your new engine and enjoy optimum performance and service life, refer to Break-in Guidelines (page 163 ).

For information about carburetor adjustment for riding at high altitude, see page 164 .


Safe Riding Precautions.....28
Starting & Stopping the Engine.....29
Preparation .....29
Starting Procedure.....29
Starter Decompressor Lever .....32
Flooded Engine .....33
How to Stop the Engine.....34
Shifting Gears .....35
Braking.....37
Parking .....39
Post-ride Inspection .....40

## Safe Riding Precautions

Before riding your motorcycle for the first time, please review the *Important Safety Information* beginning on page 2 and the previous section, titled *Before Riding*.

Even if you have ridden other motorcycles, take time to become familiar with how this motorcycle works and handles. Practice in a safe area until you build up your skills and get accustomed to your motorcycle's size and weight.

For your safety, avoid starting or operating the engine in an enclosed area such as a garage. Your motorcycle's exhaust contains poisonous carbon monoxide gas which can collect rapidly in an enclosed area and cause illness or death.

Always follow the proper starting procedure described below.

Your motorcycle can be kickstarted with the transmission in gear by pulling in the clutch lever before operating the kickstarter.

## Preparation

Make sure that the transmission is in neutral. Turn the fuel valve ON.

## Starting Procedure

To restart a warm engine, follow the procedure for *High Air Temperature.*

Normal Air Temperature
10°－35°C (50°－95°F)

LEFT SIDE

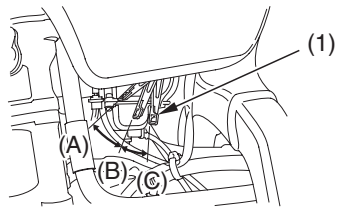


(1) choke lever

(A) fully ON
(B) detent position
(C) fully OFF

1. Pull the choke lever ( 1 ) up all the way to fully ON (A). (cont'd)

2. Keep the throttle fully closed.
3. Operate the kickstarter to start the engine. Starting from the top of the stroke, kick through to the bottom with a rapid, continuous motion. Do not operate the throttle.

NOTICE

*Allowing the kickstarter to snap back freely against the pedal stop can damage the engine case.*

4. Immediately after the engine starts, push the choke lever down to the detent position (B).

NOTICE

*Extended use of the choke may impair piston and cylinder wall lubrication and damage the engine.*

5. Warm up the engine by opening and closing the throttle slightly.
6. About a half-minute after the engine starts, push the choke lever down all the way to fully OFF (C).
   If idling is unstable, open the throttle slightly.

High Air Temperature
35°C (95°F) or above

1. Do not use the choke.
2. Keep the throttle fully closed.
3. Start the engine following step 3 under *Normal Air Temperature.*

*If the engine fails to restart:*

1. Pull the starter decompressor lever (page 32) in, open the throttle fully, and operate the kickstarter several times while pressing the engine stop button to clear the engine. Release the starter decompressor lever.
2. Start the engine (see step 3 under *Normal Air Temperature*).

Low Air Temperature
10°C (50°F) or below

1. Follow steps 1 — 3 under *Normal Air Temperature.*
2. Warm up the engine by opening and closing the throttle slightly.
3. Continue warming up the engine until it runs smoothly and responds to the throttle when the choke lever (1) is pushed down all the way to fully OFF (C).

**NOTICE**

*Extended use of the choke may impair piston and cylinder wall lubrication and damage the engine.*

## Starter Decompressor Lever

An automatic engine decompression system is interlocked with the kickstarter to make starting easier, but if you have difficulty starting the engine, you may use the manually-operated starter decompressor lever.

LEFT HANDLEBAR

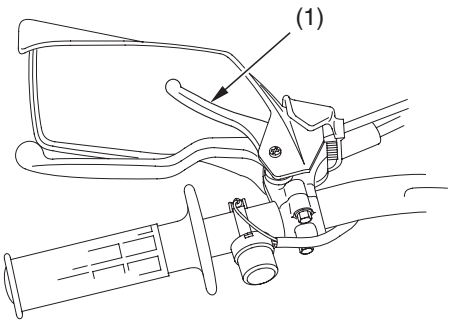


(1) starter decompressor lever

1. With the throttle fully closed, push down lightly on the kickstarter until you feel some resistance.
2. Pull the starter decompressor lever ( 1) in and push the kickstarter down again slowly about 1/4 to 1/2 of a full stroke.
3. Release the starter decompressor lever and kickstart your motorcycle in the usual manner.

The starter decompressor lever may also be used to help restart the engine while your motorcycle is rolling downhill.

1. Close the throttle. Pull the clutch lever in and shift into 2nd or 3rd gear.
2. With the motorcycle rolling, release the clutch lever. One of two things should happen. The engine will start—or the engine will not start and the rear tire will skid.

*If the rear tire skids:*

3. Pull the starter decompressor lever in. This will release engine compression and allow the rear wheel to roll while turning the engine over.
4. Release the starter decompressor lever.
5. If the engine does not start, pull the starter decompressor lever in again. Wait until the motorcycle gains speed and release the lever.

## Flooded Engine

If the engine fails to start after repeated attempts, it may be flooded with excess fuel. To clear a flooded engine:

1. Push the choke lever down all the way to OFF.
2. Pull and hold the starter decompressor lever.
3. Open the throttle fully.
4. While pushing the engine stop button, crank the engine several times with the kickstarter.
5. Release the starter decompressor lever and engine stop button.
6. Follow the *High Air Temperature* starting procedure (page 31 ).

## How to Stop the Engine

To stop the engine, shift into neutral, push the engine stop button in, and hold it in until the engine stops.

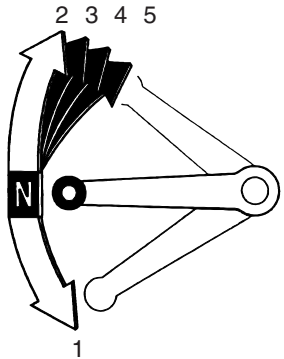


Your motorcycle has five forward gears.

To start riding, after the engine has been warmed and the side stand raised:

1. Close the throttle and pull the front brake lever in.
2. Pull the clutch lever all the way in.
3. Depress the shift lever from neutral down to first gear.
4. Release the front brake. Gradually open the throttle while you slowly release the clutch lever.
   If engine rpm (speed) is too low when you release the clutch lever, the engine will stall. If engine rpm is too high or you release the clutch lever too quickly, your motorcycle may lurch forward.
5. When you attain a moderate speed, close the throttle, pull the clutch lever in, and raise the shift lever. After shifting, release the clutch lever and apply the throttle.

(cont'd)

6. To continue shifting up to each higher gear, repeat step 5 .
7. To shift down to a lower gear, close the throttle, pull the clutch lever in, and depress the shift lever. After shifting, release the clutch lever and apply the throttle.

Remember to close the throttle and pull the clutch lever in completely before shifting.

NOTICE

*Improper shifting may damage the engine, transmission, and drive train.*

Learning when to shift gears comes with experience. Upshift to a higher gear or reduce throttle before engine rpm (speed) gets too high. Downshift to a lower gear before you feel the engine laboring (lugging) at low rpm.

NOTICE

*Downshifting can help slow your motorcycle, especially on downhills. However, downshifting when engine rpm is too high can cause engine damage.*

NOTICE

*To prevent transmission damage, do not coast or tow the motorcycle for long distances with the engine off.*

# Braking

To slow or stop, apply the front brake and rear brake smoothly, while downshifting to match your speed. Gradually increase braking as you feel the brakes slowing your speed. To prevent stalling the engine, pull the clutch lever in before coming to a complete stop. For support, put your left foot down first, then your right foot when you are through using the rear brake.

For maximum braking, close the throttle and firmly apply the brake lever and pedal controls.

Applying the brakes too hard may cause the wheels to lock and slide, reducing control of your motorcycle. If this happens, release the brake controls, steer straight ahead until you regain control, then reapply the brakes more gently.

Generally, reduce your speed or complete braking before beginning a turn. Avoid braking or closing the throttle quickly while turning. Either action may cause one or both wheels to slip. Any wheel slip will reduce your control of your motorcycle.

When riding in wet or rainy conditions, or on loose surfaces, the ability to maneuver and stop will be reduced. All of your actions should be smooth under these conditions. Rapid acceleration, braking or turning may cause loss of control. For your safety, exercise extreme caution when braking, accelerating, or turning.

# Braking

When descending a long, steep grade, use engine compression braking by downshifting, with intermittent use of both brakes.

When you brake to a stop, pull the clutch lever in before stopping completely to prevent stalling the engine. For support, put your left foot on the ground first, then your right foot when you're through braking.

# Parking

Lower the side stand to support your motorcycle. If you're through riding for the day, also turn the fuel valve OFF. Always choose a level place to park.

# Post-ride Inspection

When you return home after riding, thoroughly clean your motorcycle and remove any dirt, mud, brush, rocks or other objects you may have picked up along the way.

After cleaning, carefully inspect your motorcycle for leaks or damage.

Be sure to lubricate the drive chain (page 128 ) to prevent rusting.

# Servicing Your Honda

Keeping your motorcycle well maintained is absolutely essential to your safety. It's also a good way to protect your investment, get maximum performance, avoid breakdowns, and have more fun.

To help keep your motorcycle in good shape, this section includes a Maintenance Schedule for required servicing and step-by-step instructions for specific maintenance tasks. You'll also find important safety precautions, information on oils, and tips for keeping your Honda looking good.

For information about the exhaust emission and noise emission requirements of the U.S. Environmental Protection Agency (EPA) and the California Air Resources Board (CARB), see page 165 .

An optional tool kit may be available. Check with your Honda dealer's parts department.

USA only

**Maintenance, replacement or repair of the emission control devices and systems may be performed by any motorcycle repair establishment or individual using parts that are ''certified'' to EPA standards.**

*Before You Service Your Honda*

The Importance of Maintenance.....43
Maintenance Safety.....45
Important Safety Precautions.....45
Maintenance Schedule .....47
Maintenance Record .....51
Competition Inspection.....52

(cont'd)

# Servicing Your Honda

*Service Preparations*
Maintenance Component Locations .....55
Side Cover Removal .....58
Seat Removal .....60

*Service Procedures*
Fluids & Filters
Fuel.....61
Engine Oil .....64
Coolant.....73
Air Cleaner.....76

Engine
Throttle.....79
Clutch System .....82
Engine Idle Speed .....85
Spark Plug.....86
Spark Arrester .....88

Chassis
Suspension .....90
Brakes.....108
Wheels.....113
Tires & Tubes.....119
Side Stand .....123
Drive Chain.....124
Headlight & Taillight.....131

Appearance Care.....134

# The Importance of Maintenance

A well-maintained motorcycle is essential for safe, economical, and trouble-free riding. It will also help reduce air pollution. Careful pre-ride inspections and good maintenance are especially important because your motorcycle is designed to be ridden over rough off-road terrain.

To help you properly care for your motorcycle, this section of the manual provides a Maintenance Schedule. The service intervals in this schedule are based on average riding conditions.

More frequent service is needed if you subject your motorcycle to severe use (see the Competition Inspection checklist, page 52 ) or ride in unusually wet or dusty areas.

Frequent servicing of the air cleaner is especially important to help you avoid a possible costly engine repair.

If your motorcycle overturns or is involved in a crash, be sure your Honda dealer inspects all major parts, even if you are able to make some repairs.

**⚠ WARNING**

Improperly maintaining this motorcycle or failing to correct a problem before you ride can cause a crash in which you can be seriously hurt or killed.

Always follow the inspection and maintenance recommendations and schedules in this owner's manual.

# The Importance of Maintenance

Remember, proper maintenance is the owner's responsibility. Be sure to inspect your motorcycle before each ride and follow the Maintenance Schedule in this section.

The maintenance section includes instructions on how to perform some important maintenance tasks. Some of the most important safety precautions follow. However, we cannot warn you of every conceivable hazard that can arise in performing maintenance. Only you can decide whether or not you should perform a given task.

**⚠ WARNING**

Failure to properly follow maintenance instructions and precautions can cause you to be seriously hurt or killed.

Always follow the procedures and precautions in this owner's manual.

## Important Safety Precautions

- Make sure the engine is off before you begin any maintenance or repairs.
  This will help eliminate several potential hazards:

  **Carbon monoxide poisoning from engine exhaust.** Be sure there is adequate ventilation whenever you operate the engine.

  **Burns from hot motorcycle parts.** Let the engine and exhaust system cool before touching.

  **Injury from moving parts.** Do not run the engine unless instructed to do so.

(cont'd)

# Maintenance Safety

- Read the instructions before you begin, and make sure you have the tools and skills required.
- To help prevent the motorcycle from falling over, park it on a firm, level surface, using the side stand or a maintenance stand to provide support.
- To reduce the possibility of a fire or explosion, be careful when working around gasoline. Use only a non-flammable (high flash point) solvent such as kerosene—not gasoline—to clean parts. Keep cigarettes, sparks, and flames away from all fuel-related parts.

# Maintenance Schedule

To maintain the safety and reliability of your motorcycle, regular inspection and service is required as shown in the Maintenance Schedule that follows.

The Maintenance Schedule lists items that can be performed with basic mechanical skills and hand tools. Procedures for these items are provided in this manual.

The Maintenance Schedule also includes items that involve more extensive procedures and may require special training, tools, and equipment. Therefore, we recommend that you have your Honda dealer perform these tasks unless you have advanced mechanical skills and the required tools. Procedures for items in this schedule are provided in a service manual available for purchase from your dealer (page 172 ).

Because your motorcycle does not have an odometer, service intervals in the maintenance schedules are expressed in terms of riding days as well as miles. To avoid overlooking required service, we urge you to develop a convenient way to record the number of days and/or miles you ride.

If you do not feel capable of performing a given task or need assistance, remember that your Honda dealer knows your motorcycle best and is fully equipped to maintain and repair it. If you decide to do your own maintenance, use only genuine Honda parts or their equivalents for repair or replacement to ensure the best quality and reliability.

# Maintenance Schedule

Perform the pre-ride inspection (page 24 ) at each scheduled maintenance period.

Each item on the maintenance schedule requires some mechanical knowledge. Certain items (particularly those marked * and **) may require more technical information and tools. Consult your Honda dealer.

* Should be serviced by your Honda dealer, unless the owner has the proper tools and service data and is mechanically qualified. Refer to the official Honda Service Manual (page 172 ).
** In the interest of safety, we recommend these items be serviced only by your Honda dealer.

*Summary of Maintenance Schedule Notes and Procedures:*

NOTES:
1. Service more frequently when ridden in wet or dusty conditions.
2. USA type only.
3. Replace every 2 years. Replacement requires mechanical skill.

Maintenance Procedures:
I: inspect and clean, adjust, lubricate, or replace, if necessary
C: clean
A: adjust
L: lubricate
R: replace

| | Items \ Frequency | Whichever Comes First ⇨ | | Initial Maint. | Regular Maint. Interval | | | | Refer to page: |
|---|---|---|---|---|---|---|---|---|---|
| | | | mi | 100 | 600 | 1,200 | 1,800 | 2,400 | |
| | | | km | 150 | 1,000 | 2,000 | 3,000 | 4,000 | |
| | | Note | Month | 1 | 6 | 12 | 18 | 24 | |
| * | Fuel Line | | | | | I | | I | — |
| * * | Fuel Strainer Screen | | | | | C | | C | — |
| * | Throttle Operation | | | | | I | | I | 79 |
| | Air Cleaner | Note 1 | | | C | C | C | C | 76 |
| | Spark Plug | | | | I | I | I | I | 86 |
| * | Valve Clearance | | | I | I | I | I | I | — |
| | Engine Oil | | | R | R | R | R | R | 64 |
| | Engine Oil Filter | | | R | R | R | R | R | 68 |
| * | Engine Oil Strainer Screen in Down Tube | | | I | | C | | C | — |
| * | Decompressor System | | | I | I | I | I | I | — |
| * * | Engine Idle Speed | | | I | I | I | I | I | 85 |
| | Radiator Coolant | Note 3 | | | | I | | R | 73 |
| * | Cooling System | | | I | I | I | I | I | — |
| * | Secondary Air Supply System | Note 2 | | | | I | | I | — |

* Should be serviced by your Honda dealer, unless the owner has the proper tools and service data and is mechanically qualified. Refer to the official Honda Service Manual (page 172 ).

** In the interest of safety, we recommend these items be serviced only by your Honda dealer.

# Maintenance Schedule

| | Items \ Frequency | Whichever Comes First ⇨ | | Initial Maint. | Regular Maint. Interval | | | | Refer to page: |
|---|---|---|---|---|---|---|---|---|---|
| | | | mi | 100 | 600 | 1,200 | 1,800 | 2,400 | |
| | | | km | 150 | 1,000 | 2,000 | 3,000 | 4,000 | |
| | | Note | Month | 1 | 6 | 12 | 18 | 24 | |
| | Drive Chain | Note 1 | | I, L | I, L: every 300 mi (500 km) or 3 months | | | | 124 |
| | Drive Chain Slider | | | | I | I | I | I | 125 |
| | Brake Fluid | Note 3 | | | I | I | I | I | 109 |
| | Brake Pad Wear | | | | I | I | I | I | 111 |
| | Brake System | | | I | I | I | I | I | 108 |
| * | Headlight Aim | | | | | I | | I | 132 |
| | Clutch System | | | I | I | I | I | I | 82 |
| | Side Stand | | | | | I | | I | 123 |
| * | Suspension | | | | | I | | I | 90 |
| * | Spark Arrester | | | | C: every 1,000 mi (1,600 km) or every 100 operating hours | | | | 88 |
| * | Nuts, Bolts, Fasteners | | | I | | I | | I | — |
| * * | Wheels/Tires | | | I | I | I | I | I | 113, 119 |
| * * | Steering Head Bearings | | | I | | I | | I | — |

* Should be serviced by your Honda dealer, unless the owner has the proper tools and service data and is mechanically qualified. Refer to the official Honda Service Manual (page 172 ).

** In the interest of safety, we recommend these items be serviced only by your Honda dealer.

# Maintenance Record

Keeping an accurate maintenance record will help ensure that your motorcycle is properly maintained. Use the space under Notes to record anything you want to remind yourself about or mention to your dealer. Of course, if you find any problem while servicing your motorcycle, be sure it is corrected as soon as possible.

| Miles (km) or Months | Date | Performed By: | Notes |
|---|---|---|---|
| 600 (1,000) or 6 | | | |
| 1,200 (2,000) or 12 | | | |
| 1,800 (3,000) or 18 | | | |
| 2,400 (4,000) or 24 | | | |
| 3,000 (5,000) or 30 | | | |
| 3,600 (6,000) or 36 | | | |
| 4,200 (7,000) or 42 | | | |
| 4,800 (8,000) or 48 | | | |
| 5,400 (9,000) or 54 | | | |

# Competition Inspection

All items should be checked before each competition event. See your Honda dealer unless you are mechanically qualified and have the proper tools.

**Damage from competition use is not covered by the Distributor's Limited Warranty on your Honda.**

NOTE: Refer to the Maintenance Schedule (page 47 ) for regular service intervals.

| No | Item | Inspect For: | Action | Refer to Page: |
|---|---|---|---|---|
| 1 | all pre-ride inspection items | | | 24 |
| 2 | engine oil | contaminants | change | 64 |
| 3 | fuel line | deterioration, damage, or leakage | replace | — |
| 4 | valve clearance | correct clearance | adjust | — |
| 5 | engine idle speed | correct idle speed | adjust | 85 |
| 6 | carburetor choke | proper operation | — | — |

| No | Item | Inspect For: | Action | Refer to Page: |
|---|---|---|---|---|
| 7 | decompression mechanism | proper freeplay | adjust | — |
| 8 | clutch discs | proper operation, see NOTE 1 | replace | — |
| 9 | air cleaner | contamination or tears | clean or replace | 76 |
| 10 | spark plug | gap, tightness, proper heat range, high-tension terminal security | tighten, replace or secure | 86 |
| 11 | steering head bearings | free rotation of handlebar and steering stem nut tightness | adjust or retighten | — |
| 12 | front suspension | smooth operation, air pressure, oil capacity, no oil leaks, good boot condition | replace or adjust | 90, 92 |
| 13 | rear suspension | smooth operation, no oil leaks, proper spring height | replace or adjust | 91, 99 |

NOTE 1: Competition use may cause more rapid clutch disc wear. Refer to the official Honda Service Manual, or see your Honda dealer for clutch disassembly and wear inspection.

# Competition Inspection

| No | Item | Inspect For: | Action | Refer to Page: |
|---|---|---|---|---|
| 14 | swingarm bearings | smooth operation | replace | 91 |
| 15 | rear suspension linkage bushings | wear | replace | 91 |
| 16 | brake pads | wear beyond service limit | replace | 111 |
| 17 | drive chain: max. length/pin | 25.1 in (638 mm) / 41 pins | replace | 126 |
| 18 | sprockets | wear and secure installation | replace or tighten | 127 |
| 19 | seat | security | tighten | 60 |
| 20 | headlight | proper beam aim | adjust | 132 |
| 21 | tripmeter | proper operation | replace | 19 |
| 22 | control cables | smooth operation, kinks and correct routing | lubricate or replace | — |
| 23 | engine mounting bolts | tightness | tighten | — |

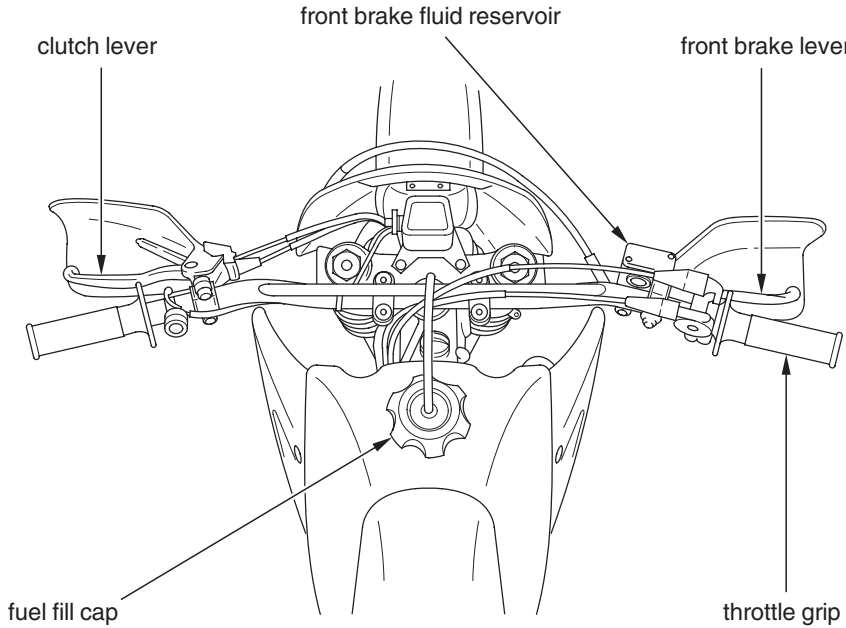
front brake fluid reservoir
clutch lever
front brake lever
fuel fill cap
throttle grip

# Maintenance Component Locations

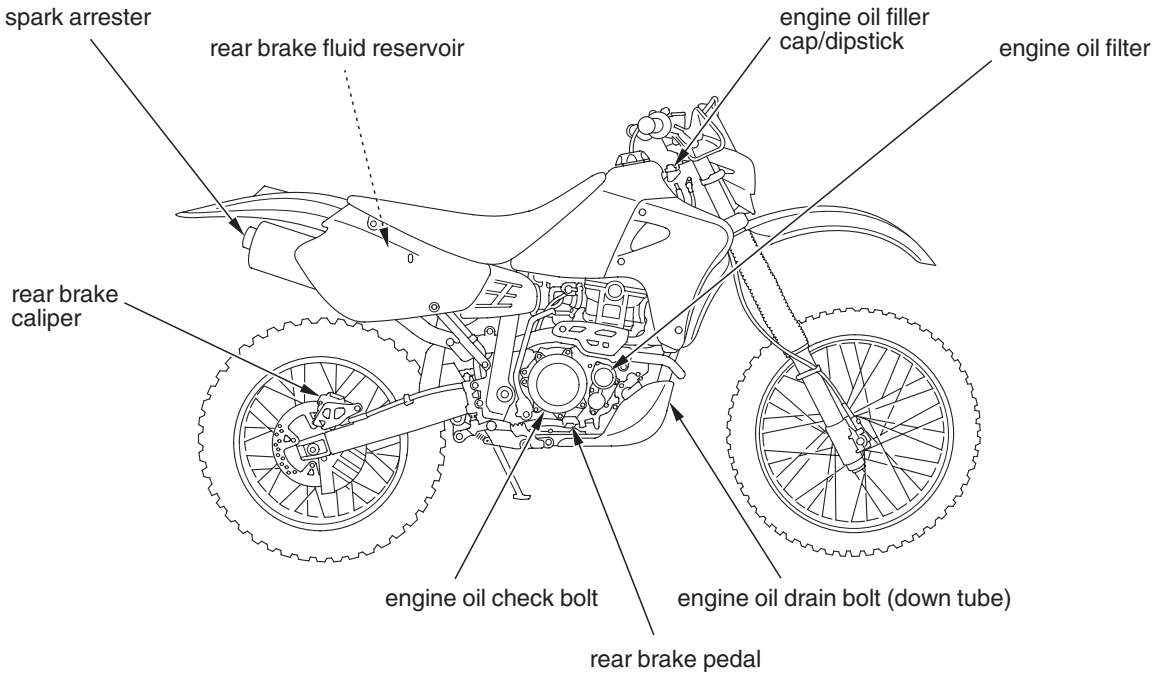

# Maintenance Component Locations

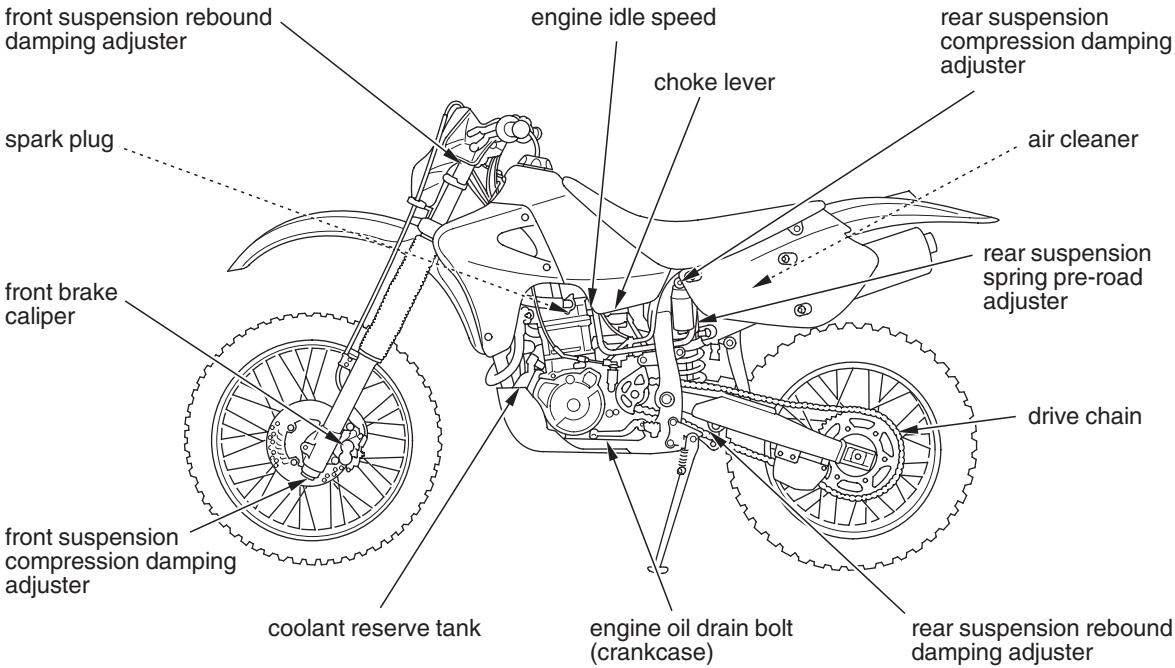

# Side Cover Removal

Refer to *Safety Precautions* on page 45 .

LEFT SIDE

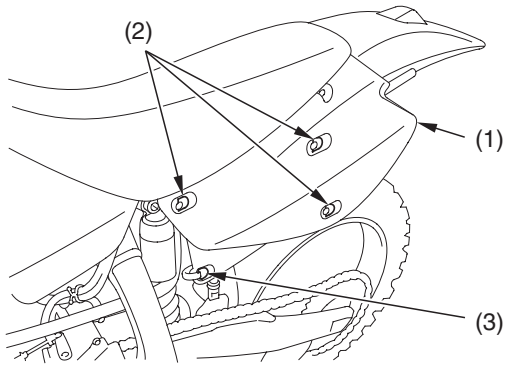


(1) left side cover
(2) quick release fastener
(3) retainer clip

The left side cover ( 1 ) must be removed to service the air cleaner. Both side covers must be removed to adjust rear suspension pre-load.

Left Side Cover Removal

1. Lift the D-ring on each quick-release fastener ( 2 ) and turn it counterclockwise until it releases.
2. Unlatch the retainer clip ( 3 ).
3. Remove the left side cover.

Left Side Cover Installation

1. Align the air cleaner housing cover with the air cleaner housing.
2. Push each quick-release fastener into its slot, lift its D-ring, and turn it clockwise until it is secure.
3. Latch the retainer clip.

Refer to *Safety Precautions* on page 45 .

RIGHT SIDE

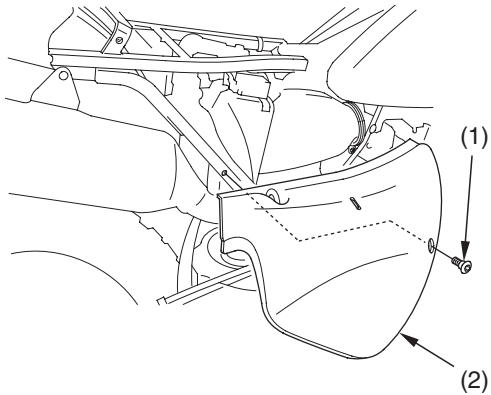


(1) bolt
(2) right side cover

Right Side Cover Removal

1. Remove the right seat bolt (page 60 ).
2. Remove the bolt ( 1 ).
3. Pull the right side cover ( 2 ) out.

Right Side Cover Installation

1. Slide the top of the right side cover under the bottom edge of the seat.
2. Install the bolt and tighten it.
3. Tighten the seat bolt.

# Seat Removal

Refer to *Safety Precautions* on page 45 .

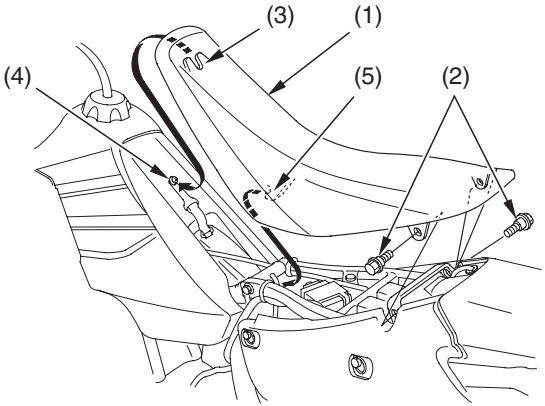


(1) seat
(2) seat bolts
(3) slot
(4) pin
(5) prong

The seat ( 1 ) must be removed to adjust rear suspension pre-load.

Removal

1. Remove the seat bolts ( 2 ) securing the seat.
2. Slide the seat back.

Installation

1. Align the locating slot ( 3 ) under the front of the seat with the pin ( 4 ) on the rear of the fuel tank.
2. Align the locating prong ( 5 ) on the bottom of the seat with the frame.
3. Slide the seat into position.
4. Install the bolts and tighten them.

Refer to *Safety Precautions* on page 45.

## Fuel Recommendation

| | |
|---|---|
| Type | unleaded |
| Pump Octane Number | 91 (or higher) |

Your engine is designed to use any gasoline that has a pump octane number of 91or higher. Gasoline pumps at service stations normally display the pump octane number. For information on the use of oxygenated fuels, see page 169.

Use of lower octane gasoline can cause persistent ‘‘pinging’’ or ‘‘spark knock’’ (a louder rapping noise) which, if severe, can lead to engine damage. (Light pinging experienced while operating under a heavy load, such as climbing a hill, is no cause for concern.)

If pinging or spark knock occurs at a steady engine speed under normal load, change brands of gasoline. If pinging or spark knock persists, consult your Honda dealer.

We recommend that you use unleaded fuel because it produces fewer engine deposits and extends the life of exhaust system components.

Never use stale or contaminated gasoline or an oil/gasoline mixture. Avoid getting dirt, dust, or water in the fuel tank.

## Refueling Procedure

Fuel Tank Capacity, including reserve:
2.64 US gal (10.0 ℓ)

Reserve Capacity:
0.53 US gal (2.0 ℓ)

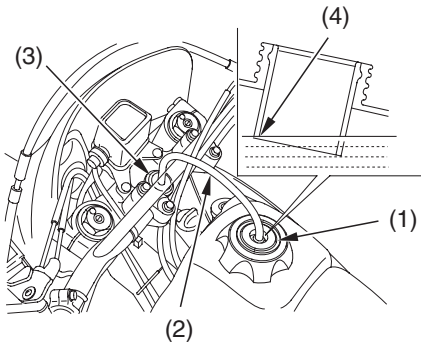


(1) fuel fill cap
(2) breather tube
(3) steering stem nut
(4) filler neck

1. To open the fuel fill cap (1), pull the breather tube (2) out of the steering stem nut (3). Turn the fuel fill cap counterclockwise and remove it.
2. Add fuel until the level reaches the bottom of the filler neck (4). Avoid overfilling the tank. There should be no fuel in the filler neck.

**⚠ WARNING**

Gasoline is highly flammable and explosive. You can be burned or seriously injured when handling fuel.

- Stop the engine and keep heat, sparks and flame away.
- Handle fuel only outdoors.
- Wipe up spills immediately.

3. After refueling, turn the fuel fill cap clockwise until it is secure.
4. Insert the breather tube in the steering stem nut.

If you replace the fuel fill cap, use only a genuine Honda replacement part.

# Engine Oil

Refer to *Safety Precautions* on page 45 .

Using the proper oil, and regularly checking, adding, and changing oil will help extend your engine's life. Even the best oil wears out. Changing oil helps get rid of dirt and deposits held in the engine. Operating the engine with old or dirty oil can damage your engine. Running the engine with insufficient oil can cause serious damage to the engine and transmission.

## Oil Recommendation

| | |
|---|---|
| API classification | SG or higher except oils labeled as energy conserving on the circular API service label |
| viscosity (weight) | SAE 10W-30* |
| JASO T 903 standard | MA |
| suggested oil** | Pro Honda GN4 or HP4 (without molybdenum additives) 4-stroke oil (USA & Canada), or Honda 4-stroke oil (Canada only), or an equivalent motorcycle oil |

* For normal air temperatures. See next page for additional temperature/viscosity information.

**Suggested oils are equal in performance to SJ oils that are not labeled as energy conserving on the circular API service label.

- Your motorcycle does not need oil additives. Use the recommended oil.
- Do not use oils with graphite or molybdenum additives. They may adversely affect clutch operation.
- Do not use API SH or higher oils displaying a circular API ‘‘energy conserving’’ service label on the container. They may affect lubrication and clutch performance.

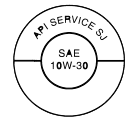


NOT RECOMMENDED OK

- Do not use non-detergent, vegetable, or castor based racing oils.

# Engine Oil

Other viscosities shown in the following chart may be used when the average temperature in your riding area is within the indicated range.

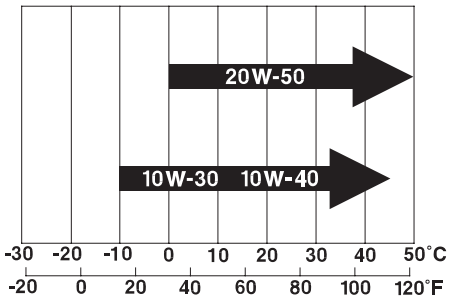


JASO T 903 standard

The JASO T 903 standard is an index for engine oils for 4-stroke motorcycle engines. There are two classes: MA and MB.

Oil conforming to the standard is labeled on the oil container. For example, the following label shows the MA classification.

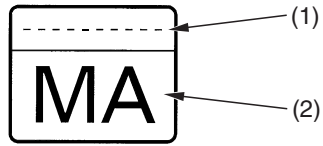


PRODUCT MEETING JASO T 903
COMPANY GUARANTEEING THIS MA PERFORMANCE:

(1) code number of the sales company of the oil
(2) oil classification

## Checking & Adding Oil

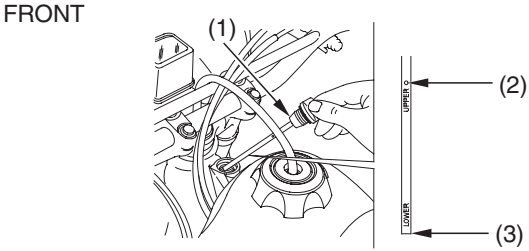


(1) oil filler cap/dipstick
(2) UPPER level mark
(3) LOWER level mark

1. Park your motorcycle on a firm, level surface.
2. Clean around the oil filler cap/dipstick ( 1 ) and nearby surfaces.
3. Start the engine and let it idle for 5 minutes. If the air temperature is below 10°C (50°F), let the engine idle for an additional 5 minutes (a total of 10 minutes).
   An engine that is not warmed sufficiently may give an inaccurate (low) oil level reading.
   During idling, make sure your motorcycle is supported in an upright position to assure an accurate oil level reading. Stop the engine.
4. Immediately unscrew and remove the oil filler cap/dipstick. Wipe it clean.
5. Hold the motorcycle upright.
6. Insert the oil filler cap/dipstick until it seats, but do not screw it in.
7. Remove the oil filler cap/dipstick and check the oil level.
   - If the oil is at or near the UPPER level mark ( 2 ), you do not have to add oil.
   - If the oil is below or near the LOWER level mark ( 3 ), add the recommended oil until it reaches the UPPER level mark. (Do not overfill.)

(cont'd)

8. Insert the oil filler cap/dipstick and screw it in tightly.
9. Check for oil leaks.

The engine contains a crankcase oil level check bolt (4 ). Remove the bolt and check that the level is flush with the lower edge of the hole. If it is, install and tighten the bolt, start the engine and check the engine oil level. If the crankcase oil level is low, add the recommended engine oil before starting the engine to check the engine oil level.

RIGHT SIDE

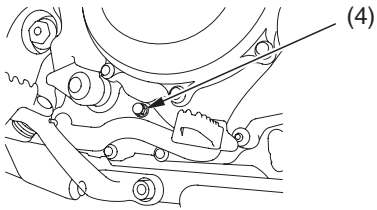


(4) check bolt

## Changing Engine Oil & Filter

Your motorcycle's oil filter has very specific performance requirements. Use a new genuine Honda oil filter specified for your model or a filter of equal quality.

**NOTICE**

*Using the wrong oil filter may result in leaks or premature engine damage.*

Changing the oil requires a torque wrench. If you do not have it and the necessary skill, we recommend that you have your Honda dealer perform this service.

If a torque wrench is not used for this installation, see your Honda dealer as soon as possible to verify proper assembly.

FRONT LEFT SIDE

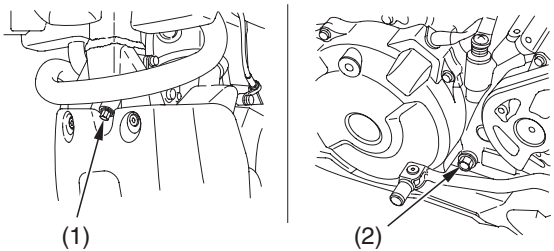


(1) drain bolt (down tube)
(2) drain bolt (left crankcase)

*Drain the Engine Oil:*

1. Park your motorcycle on a firm, level surface.
2. If the engine is cold, start it and let it idle for 3-5 minutes. Turn the engine off. Wait 2-3 minutes for the oil to settle.
3. Remove the oil filler cap/dipstick from the top of the frame.
4. Place a drain pan under the crankcase.
5. Remove the oil drain bolt (1) on the down tube, and the drain bolt (2) on the left crankcase.
6. After the oil has drained, check the sealing washers on the drain bolts. Replace, if necessary.

(cont'd)

7. Pour the drained oil into a suitable container and dispose of it in an approved manner (page 145 ).

NOTICE

*Improper disposal of drained fluids is harmful to the environment.*

8. Install the oil drain bolts and tighten to the specified torque:
   Crankcase drain bolt:
   18 lbf·ft (24 N·m , 2.4 kgf·m)
   Frame drain bolt:
   19 lbf·ft (26 N·m , 2.7 kgf·m)

*Install a New Engine Oil Filter:*

Change the oil filter after draining the engine oil.

9. Remove the oil filter bolts ( 3 ) and oil filter cover ( 4 ).

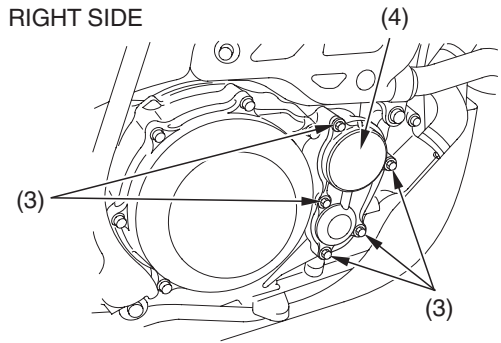


(3) oil filter bolts
(4) oil filter cover

10. Remove the oil filter (5) from the cover.

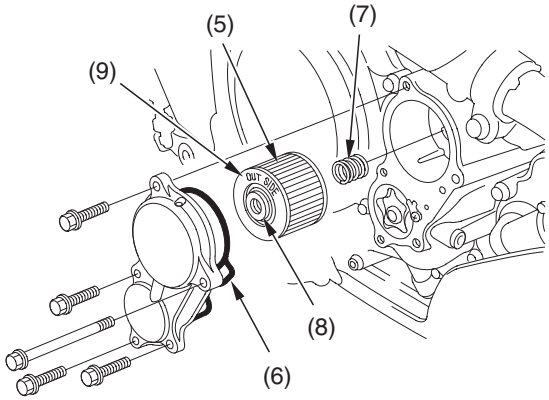


(5) oil filter
(6) O-ring
(7) spring
(8) rubber seal
(9) OUT-SIDE mark

11. Discard the oil filter in an approved manner (page 145).

**NOTICE**

*Improper disposal of drained fluids is harmful to the environment.*

12. Check that the oil filter cover O-ring (6) is in good condition.
13. Position the spring (7) against the engine crankcase and install a new oil filter with the rubber seal (8) facing out, away from the engine. You should see the ‘‘OUT-SIDE’’ mark (9) on the filter body, near the seal.

**NOTICE**

*Improper installation of the oil filter can cause serious engine damage.*

(cont’d)

14. Reinstall the O-ring and oil filter cover, making sure the bolts are tightened securely to the specified torque.
    Oil filter bolt:
    9 lbf·ft (12 N·m , 1.2 kgf·m)

*Add Engine Oil:*

If the oil filter was replaced:
1.7 US qt (1.6 ℓ)

If the oil filter was not replaced, add approximately:
1.65 US qt (1.56 ℓ)

To fill the oil tank to the upper level, oil should be added in two steps.

15. Pour the recommended oil into the oil tank, up to the upper level mark.
16. Install the oil filler cap/dipstick securely.
17. Start the engine. Let it idle 5 minutes. During idling, support your motorcycle in an upright position on a firm, level surface to assure an accurate oil level reading.
18. Stop the engine. Remove the oil filler cap/dipstick.
19. Add the recommended oil up to the UPPER level mark. (Do not overfill.)
20. Reinstall the oil filler cap/dipstick.
21. Check for oil leaks.

Your motorcycle's liquid cooling system dissipates engine heat through the coolant jacket that surrounds the cylinder and cylinder head.

Maintaining the coolant will allow the cooling system to work properly and prevent freezing, overheating, and corrosion.

## Coolant Recommendation

Use Pro Honda HP coolant or an equivalent high quality ethylene glycol antifreeze containing corrosion protection inhibitors specifically recommended for use in aluminum engines. Check the antifreeze container label.

Use only distilled water as a part of the coolant solution. Water that is high in mineral content or salt may be harmful to the aluminum engine.

NOTICE

*Using coolant with silicate inhibitors may cause premature wear of water pump seals or blockage of radiator passages. Using tap water may cause engine damage.*

The factory provides a 50/50 solution of antifreeze and water in this motorcycle. This coolant solution is recommended for most operating temperatures and provides good corrosion protection.

Decreasing the concentration of antifreeze to less than 40% will not provide proper corrosion protection.

# Coolant

Increasing the concentration of antifreeze is not recommended because it decreases cooling system performance. Higher concentrations of antifreeze (up to 60%) should only be used to provide additional protection against freezing. Check the cooling system frequently during freezing weather.

## Checking & Adding Coolant

Refer to *Safety Precautions* on page 45.

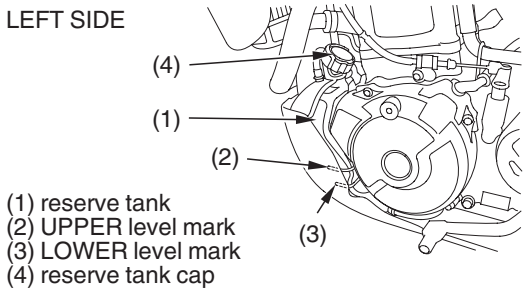


1. With the engine at normal operating temperature, check the coolant level in the reserve tank ( 1). It should be between the UPPER ( 2 ) and LOWER ( 3 ) level marks. If the reserve tank is empty, or if coolant loss is excessive, check for leaks and see your Honda dealer for repair.

2. Remove the reserve tank cap (4). Always add coolant to the reserve tank. Do not attempt to add coolant by removing the radiator cap.
3. Add coolant to the reserve tank as required to bring the coolant level to the UPPER level mark.
4. Install the reserve tank cap.

## Coolant Replacement

Refer to *Safety Precautions* on page 45 .

Coolant should be replaced by your Honda dealer, unless you have the proper tools and service data and are mechanically qualified. Refer to the official Honda Service Manual (page 172).

**⚠ WARNING**

Removing the radiator cap while the engine is hot can cause the coolant to spray out, seriously scalding you.

Always let the engine and radiator cool down before removing the radiator cap.

To properly dispose of drained coolant, refer to *You & the Environment,* page 145 .

**NOTICE**

*Improper disposal of drained fluids is harmful to the environment.*

# Air Cleaner

Refer to *Safety Precautions* on page 45 .

Proper air cleaner maintenance is very important for off-road vehicles. A dirty, water-soaked, worn-out, or defective air cleaner will allow dirt, dust, mud, and other impurities to pass into the engine.

Service the air cleaner more frequently if you ride in unusually wet or dusty areas. Your Honda dealer can help you determine the correct service interval for your riding conditions.

Your motorcycle's air cleaner has very specific performance requirements. Use a new genuine Honda air cleaner specified for your model or an air cleaner of equal quality.

**NOTICE**

*Using the wrong air cleaner can result in premature engine damage.*

Proper air cleaner maintenance can prevent premature engine wear or damage, expensive repairs, low engine power, poor gas mileage, and spark plug fouling.

**NOTICE**

*Improper or lack of proper air cleaner maintenance can cause poor performance and premature engine wear.*

## Cleaning

LEFT SIDE

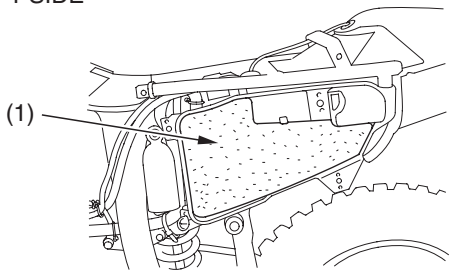


(1) air cleaner

1. Remove the left side cover (page 58 ).
2. Remove the air cleaner ( 1 ).
3. Gently wash the air cleaner in clean, non-flammable (high flash point) solvent such as kerosene—not gasoline. After cleaning, gently squeeze out the remaining solvent. Avoid twisting or wringing the air cleaner. This can tear the foam.
4. Inspect for tears or cracks in the foam or seams of the air cleaner. Replace the air cleaner if it is damaged.
5. Allow the air cleaner to dry thoroughly before applying oil. A wet air cleaner will not fully absorb the oil.

(cont'd)

6. Pour clean Pro Honda Foam Filter Oil or an equivalent (Canada: Honda Foam Filter Oil or an equivalent) over the entire surface of the air cleaner. Use both hands to evenly spread the oil into the air cleaner. Gently squeeze out any excess oil. (To keep your hands dry, place the air cleaner in a clean plastic bag before spreading the oil into the air cleaner.)
7. Install the air cleaner.
8. Install the left side cover (page 58 ).

Refer to *Safety Precautions* on page 45.

## Throttle Freeplay

RIGHT SIDE

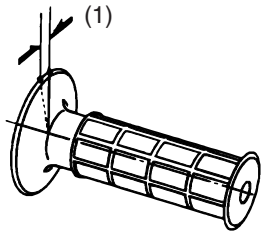


(1) freeplay

Inspection

Check freeplay (1).

Freeplay: 1/16 – 1/4 in (2 – 6 mm)

If necessary, adjust to the specified range.

Upper Adjustment

Minor adjustments are generally made with the upper adjuster.

RIGHT HANDLEBAR

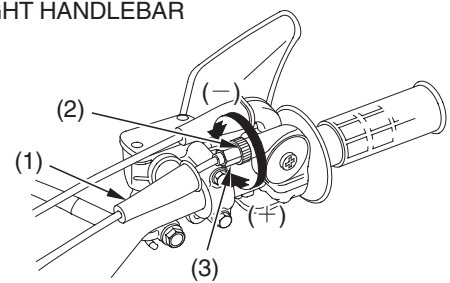


(1) rubber dust cover
(2) upper lock nut
(3) upper adjuster

(+) increase freeplay
(–) decrease freeplay

1. Pull the rubber dust cover (1) back.
2. Loosen the upper lock nut (2) on the throttle cable mechanism.
3. Turn the upper adjuster (3).

(cont'd)

4. Tighten the lock nut. Return the dust cover to its normal position.
5. After adjustment, check for smooth rotation of the throttle grip from fully closed to fully open in all steering positions.

Lower Adjustment

The lower adjuster is used for major freeplay adjustment, such as after replacing the throttle cables or removing the carburetor. It is also used if you can not get the proper adjustment with the upper adjuster.

LEFT SIDE

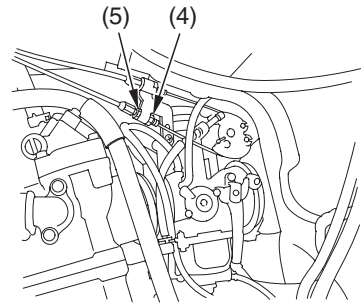


(4) lower lock nut
(5) lower adjuster

1. Loosen the lower lock nut (4 ).
2. Turn the lower adjuster ( 5 ).
3. Tighten the lock nut.

If you can't get the freeplay within the specified range, contact your Honda dealer.

## Throttle Inspection

RIGHT HANDLEBAR

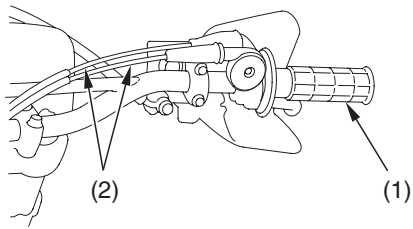


(1) throttle
(2) throttle cables

1. Check that the throttle assembly is positioned properly and the securing bolts are tight.
2. Check for smooth rotation of the throttle ( 1 ) from fully open to fully closed in all steering positions. If there is a problem, see your Honda dealer.
3. Inspect the condition of the throttle cables ( 2 ) from the throttle grip down to the carburetor. If the cable is kinked or chafed, have it replaced.
4. Check the cables for tension or stress in all steering positions.
5. Lubricate the cables with a commercially-available cable lubricant to prevent premature rust and corrosion.

# Clutch System

Refer to *Safety Precautions* on page 45 .

## Clutch Freeplay

LEFT HANDLEBAR

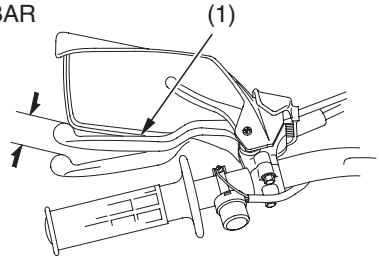


(1) clutch lever

Inspection

Check freeplay.

Freeplay: 3/8－13/16 in (10－20 mm)

If necessary, adjust to the specified range.

Improper freeplay adjustment can cause premature clutch wear.

Upper Adjustment

Minor adjustments are generally made with the upper clutch cable adjuster.

LEFT HANDLEBAR

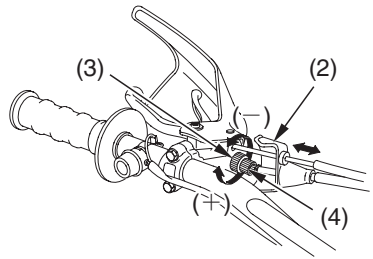


(2) rubber dust cover
(3) upper lock nut
(4) upper clutch cable adjuster

(＋) increase freeplay
(－) decrease freeplay

1. Pull the rubber dust cover (2 ) back.
2. Loosen the upper lock nut (3 ).
3. Turn the upper clutch cable adjuster (4 ) to obtain the specified freeplay.

4. Tighten the lock nut and check the freeplay again.

Lower Adjustment

The lower clutch cable adjuster is used if the upper clutch cable adjuster is threaded out near its limit－or the correct freeplay cannot be obtained.

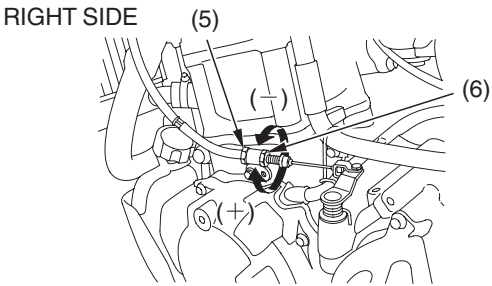


(5) lower adjusting nut
(6) lower lock nut
(＋) increase freeplay
(－) decrease freeplay

1. Loosen the upper lock nut (3) and turn the upper clutch cable adjuster (4) all the way in (to provide maximum freeplay).
2. Tighten the upper lock nut and pull the dust cover (2) back to its normal position.
3. Hold the lower adjusting nut (5) and loosen the lower lock nut (6) at the lower end of the cable.
4. Turn the lower adjusting nut to obtain the specified freeplay.
5. Hold the lower adjusting nut and tighten the lower lock nut. Check the adjustment.

(cont'd)

6. Start the engine, pull the clutch lever in, and shift into gear. Make sure the engine does not stall and the motorcycle does not creep. Gradually release the clutch lever and open the throttle. Your motorcycle should move smoothly and accelerate gradually.

If you can't get proper adjustment, or the clutch does not work properly, the cable may be kinked or worn, or the clutch discs may be worn. See your Honda dealer or refer to the official Honda Service Manual (page 172 ).

## Other Inspections & Lubrication

- Check that the clutch lever assembly is positioned properly and the securing bolts are tight.
- Check the clutch cable for kinks or signs of wear. If necessary, have it replaced.
- Lubricate the clutch cable with a commercially-available cable lubricant to prevent premature wear and corrosion.

# Engine Idle Speed

Refer to *Safety Precautions* on page 45.

LEFT SIDE

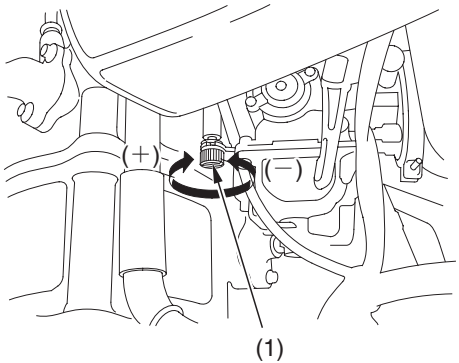


(1) throttle stop screw

(+) increase rpm
(−) decrease rpm

The engine must be at normal operating temperature for accurate idle speed adjustment. Ten minutes of stop-and-go riding is sufficient.

Do not attempt to compensate for faults in other systems by adjusting idle speed. See your Honda dealer for regularly scheduled carburetor adjustments.

1. Warm up the engine, shift to neutral and place the motorcycle on its stand.
2. Connect a tachometer, following the tachometer manufacturer's instructions.
3. Adjust idle speed with the throttle stop screw (1).
   Idle Speed: 1,400 ± 100 rpm

# Spark Plug

Refer to *Safety Precautions* on page 45 .

## Spark Plug Recommendation

The recommended standard spark plug is satisfactory for most riding conditions. However, if you plan to ride for extended periods at high speeds or near maximum power (high engine rpm) in hot climates, or plan extended riding in cold climates, a different plug may be recommended.

| | |
|---|---|
| Standard | BKR7E-11 (NGK) or K22PR-U11 (DENSO) |
| For extended high speed riding | BKR8E-11 (NGK) or K24PR-U11 (DENSO) |

Use only the recommended type of spark plugs in the recommended heat range.

**NOTICE**

*Using spark plugs with an improper heat range can cause engine damage.*

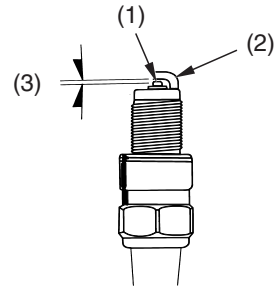


(1) center electrode
(2) side electrode
(3) spark plug gap

1. Clean any dirt from around the spark plug base.

2. Disconnect the spark plug cap.
3. Remove the spark plug with a plug wrench.
4. Inspect the spark plug electrodes for wear. The center electrode ( 1) should have square edges. The side electrode (2) should not be eroded. The insulator should not be cracked or chipped.
5. Check the spark plug gap (3), using a wire-type feeler gauge. If adjustment is necessary, bend the side electrode carefully. The gap should be:
   0.039－0.043 in (1.00－1.10 mm)
   Make sure the plug washer is in good condition.
   If you have to install a new plug, first check the gap.
6. With the plug washer attached, thread the spark plug in by hand (to prevent cross-threading).
7. Tighten the spark plug:
   - If the old plug is good:
     1/8 turn after it seats.
   - If installing a new plug, tighten it twice to prevent loosening:
     a) First, tighten the plug:
        NGK: 3/4 turn after it seats.
        DENSO: 1/2 turn after it seats.
     b) Then loosen the plug.
     c) Next, tighten the plug again:
        1/8 turn after it seats.

NOTICE

*An improperly tightened spark plug can damage the engine. If a plug is too loose, a piston may be damaged. If a plug is too tight, the threads may be damaged.*

8. Reinstall the spark plug cap. Take care to avoid pinching any cables or wires.

# Spark Arrester

Refer to *Safety Precautions* on page 45 .

The spark arrester must be serviced every 100 operating hours to maintain its efficiency.

Regular servicing prevents carbon buildup (which can diminish engine performance) and also complies with USDA regulations for regular maintenance to assure proper function. The spark arrester prevents random sparks from the combustion process in your engine from reaching the environment.

RIGHT REAR

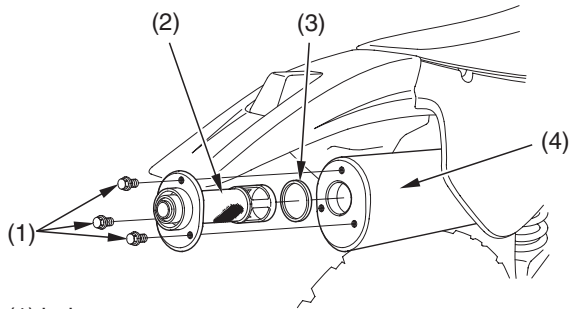


(1) bolts
(2) spark arrester
(3) gasket
(4) muffler

1. Allow the engine and muffler to cool.
2. Remove the bolts ( 1 ), the spark arrester ( 2 ), and the gasket ( 3 ) from the muffler ( 4 ).

3. Use a brush to remove carbon deposits from the spark arrester screen. Be careful to avoid damaging the spark arrester screen. The spark arrester must be free of breaks and holes. Replace, if necessary. Check the gasket. Replace, if necessary.

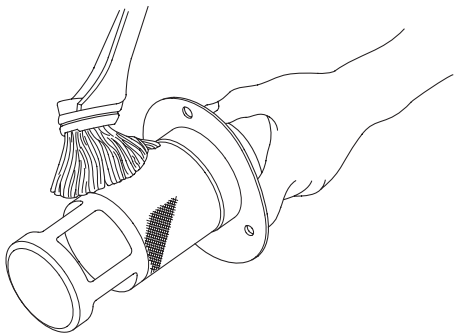

4. Install the spark arrester and the gasket in the muffler and tighten the bolts securely.

# Suspension

Refer to *Safety Precautions* on page 45 .

Loose, worn, or damaged suspension components may adversely affect the handling and stability of your motorcycle. If any suspension components appear worn or damaged, see your Honda dealer for further inspection. Your dealer is qualified to determine whether or not replacement parts or repairs are needed.

## Front Suspension Inspection

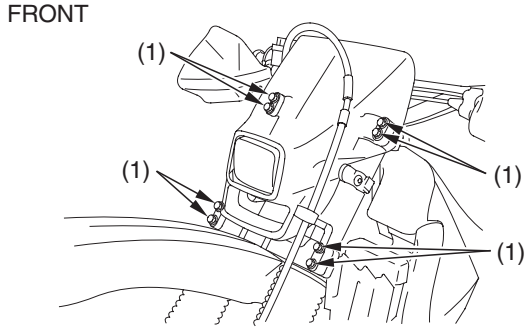


(1) mounting bolts

1. Check fork operation. Pull the front brake lever in, to lock the brake. Then pump up and down on the fork legs several times. The suspension should function smoothly. There should be no oil leakage.

2. Check the security of all handlebar and fork mounting bolts ( 1 ). If any front suspension components appear worn or damaged, see your Honda dealer for further inspection.

## Rear Suspension Inspection

LEFT SIDE

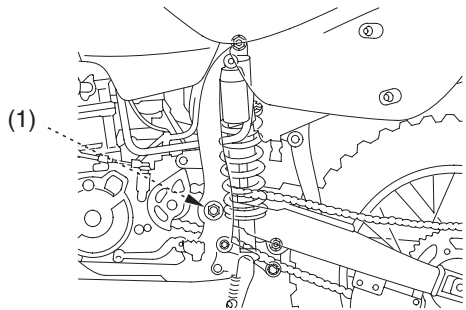


(1) swingarm bearing

RIGHT SIDE

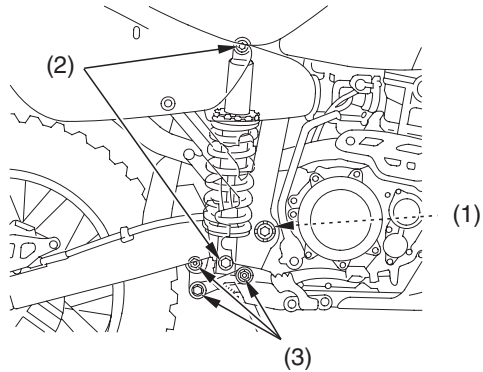


(1) swingarm bearing
(2) shock absorber attachment points
(3) suspension linkage attachment points

1. Place the motorcycle on a maintenance stand. Push hard against the side of the rear wheel and feel for any freeplay which indicates worn swingarm bearings ( 1 ).

(cont'd)

2. Check that the fasteners for the shock absorber attachment points (2) and rear suspension linkage attachment points (3) are secure.
3. Check for oil leaks in the shock absorber. If any rear suspension components appear worn or damaged, see your Honda dealer for further inspection.

## Front Suspension Adjustment

The front suspension can be adjusted for the rider's weight and riding conditions by changing the oil volume and the rebound and compression damping. Use the following chart to determine the correct adjustment for you.

| Condition | Oil Volume | Rebound. Damp. | Comp. Damp. |
|---|---|---|---|
| Entire range of travel is too hard. | — | softer | softer |
| Entire range of travel is too soft (bottoming). | — | stiffer | stiffer |
| Initial travel is good, but the final stages of travel are too soft (bottoming). | increase | — | — |
| The initial stages of travel are good, but the final stages are hard. | reduce | — | — |
| The initial stages of travel are too soft, but the final stages are good. | reduce | stiffer | stiffer |
| The initial stages of travel are too hard, but the final stages are good. | increase | softer | softer |

## Front Suspension Air Pressure

The standard air pressure is 0 psi (0 kPa, 0 kgf/cm$^2$). You may relieve accumulated air pressure in the fork legs by using the pressure release screws. The front wheel should be off the ground before you release the pressure.

FRONT

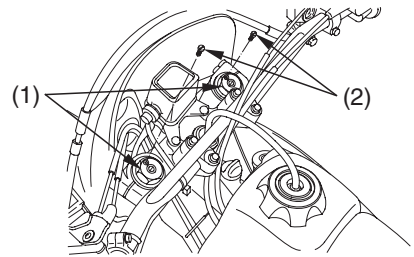


(1) pressure release screws
(2) fork caps

1. Raise the front wheel off the ground by placing a support block under the engine.
2. Remove the pressure release screws (1).
3. Check that the O-ring is in good condition.
4. Install the pressure release screws.

## Front Suspension Oil Volume

FRONT

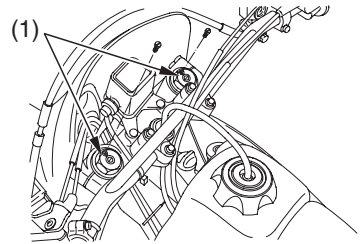


(1) fork caps

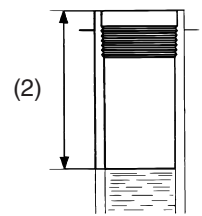


(2) oil level

Low oil levels provide a soft ride. Use a low oil level for easy terrain and smooth riding conditions. High oil levels provide a firm ride. Use a high oil level for heavy loads and rough riding conditions.

1. Raise the front wheel off the ground by placing a support block under the engine.
2. Remove the pressure release screws to release any accumulated air pressure.
3. Remove the fork caps ( 1 ) and springs from the fork tubes. Inspect the O-rings on the fork caps and replace them if they are damaged.
   The fork caps are under extreme spring pressure. Use care when removing the caps and wear eye and face protection.
4. Compress the fork all the way and measure the oil level (2) from the top of the tubes.
   Standard oil level:
   4.7 in (120 mm)

   To lower the oil level (decrease volume), use a syringe. Add oil with a graduated beaker for accurate measurements.
   The recommended oil level range is:
   3.5－6.1 in (90－155 mm)

   Increase or decrease oil in increments of:
   0.17 US oz (5.0 $cm^3$)

   To prevent fork damage, do not fill past the recommended maximum level.
   To prevent poor performance, do not use a level lower than the recommended minimum.

(cont'd)

5. Be sure the oil level is the same in both fork tubes.
6. Clean and dry the fork springs with a lint-free cloth. Install the fork springs. Oil the fork cap O-rings and install the fork caps. Torque the fork caps to:
   22 lbf·ft (30 N·m , 3.1 kgf·m)

## Front Suspension Damping

Rebound Damping
The rebound damping adjuster has at least 18 positions. Turning the adjuster screw one full turn advances the adjuster 4 positions.

Always start with the full hard position when adjusting damping.

*To adjust to the standard position:*

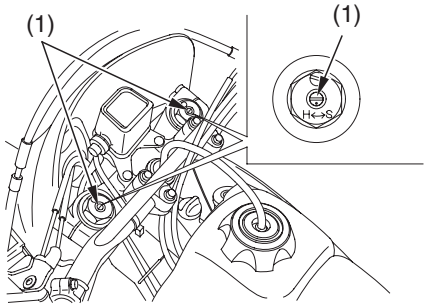


(1) rebound damping adjuster

1. Turn the adjuster (1) clockwise until it will no longer turn (lightly seats). This is the full hard position.
2. Turn the adjuster counterclockwise 9 clicks. This is the standard position.
3. Make sure that both fork legs are adjusted to the same position.

Compression Damping

Compression damping affects how quickly the fork compresses.

The fork compression damping adjuster has at least 20 positions (clicks). Turning the adjuster screw one full turn advances the adjuster 4 positions.

Always start with the full hard position when adjusting damping.

*To adjust to the standard position:*

LEFT FRONT

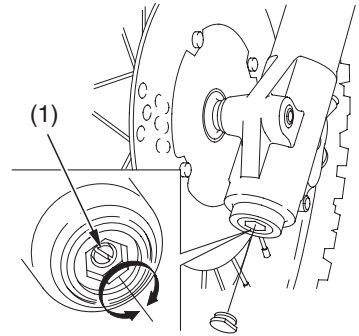


(1) compression damping adjuster

1. Turn the adjuster ( 1 ) clockwise until it will no longer turn (lightly seats). This is the full hard position.
2. Turn the adjuster counterclockwise 11 clicks. This is the standard position.
3. Make sure that both fork legs are adjusted to the same position.

## Rear Suspension Adjustment

The rear suspension can be adjusted for the rider's weight and riding conditions by changing the spring pre-load and the rebound and compression damping. Use the following chart to determine the correct adjustment for you.

The rear shock absorber assembly includes a damper unit that contains high pressure nitrogen gas. Do not attempt to disassemble, service, or dispose of the damper; see your Honda dealer. The instructions found in this owner's manual are limited to adjustments of the shock assembly only.

# Suspension

| Condition | Step 1 | Step 2 | Step 3 |
|---|---|---|---|
| Bottoming | shorten the spring length (to increase pre-load) | turn the compression adjuster to a stiffer position (to increase damping force) | |
| Soft | turn the compression adjuster to a stiffer position (to increase damping force) | shorten the spring length (to increase pre-load) | turn the rebound adjuster to a stiffer position (to increase damping force) |
| Hard | increase the spring length (to decrease pre-load) | turn the compression adjuster to a softer position (to decrease damping force) | turn the rebound adjuster to a softer position (to decrease damping force) |
| Excessive Sinking | shorten the spring length (to increase pre-load) | | |

Make changes one step at a time. Test ride your motorcycle after each adjustment. If necessary, proceed to the next step.

## Rear Suspension Spring Pre-Load

Pre-load should be adjusted when the engine is cold because it is necessary to remove the muffler.

An optional pin spanner is available for turning the lock nut and adjusting nut to adjust spring pre-load.

1. Remove the seat (page 60).
2. Remove the left and right side covers (page 58).
3. Remove the muffler by loosening the muffler clamp bolt (1) and removing the lower (2) and upper muffler bolts (3). Pull the muffler away from the exhaust pipe.
4. Remove the rear brake fluid reservoir mounting bolt (4) and remove the brake hose from its clamp. Make sure you keep the reservoir in a level position throughout the procedure to prevent air entering the brake system.

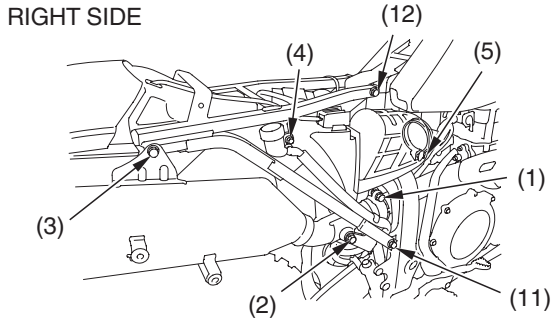


(1) muffler clamp bolt
(2) muffler bolt (lower)
(3) muffler bolt (upper)
(4) reservoir mount bolt
(5) screw
(11) subframe lower bolt
(12) subframe upper bolt

(cont'd)

5. Loosen the screw (5) on the air cleaner connecting tube clamp and remove the air cleaner connecting tube from the carburetor.

Be careful not to allow dust into the carburetor. Severe engine damage could result.

6. Disconnect the breather tube (6) from air cleaner housing.
7. Disconnect the air cleaner tube (7) from air cleaner housing. (USA only)
8. Disconnect the electrical connectors (8).

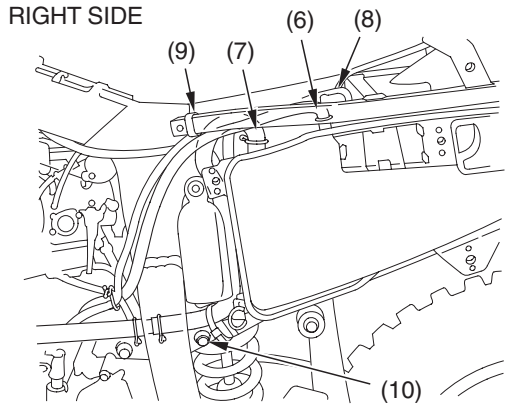


(6) breather tube
(7) air cleaner tube (USA only)
(8) electrical connectors
(9) rubber band and clip
(10) subframe lower bolt

9. Loosen the rubber band and clip (9).
10. Remove the subframe mounting bolts (10) (11) (12).
11. Remove the subframe by pulling it straight back.
12. Raise the rear wheel off the ground by placing a support block under the engine.

13. Measure the spring length (13).
    Standard: 9.31 in (236.5 mm)
    Minimum: 9.07 in (230.5 mm)
    Maximum: 9.6 in (244 mm)

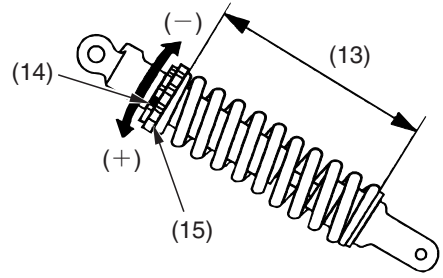


(13) spring length
(14) lock nut
(15) adjusting nut

(+) increase preload
(−) decrease preload

(cont'd)

14. To increase spring pre-load:
    Loosen the lock nut (14) with the optional pin spanner and turn the adjusting nut (15) to shorten the spring length. Do not shorten to less than:
    9.07 in (230.5 mm)

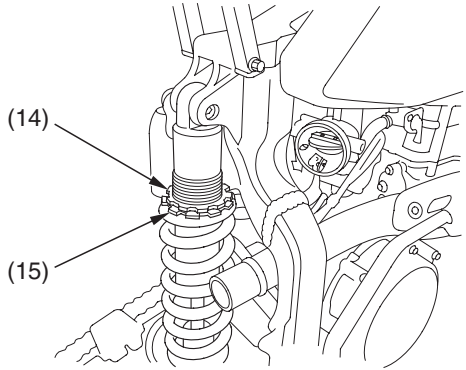


(14) lock nut
(15) adjusting nut

To decrease spring pre-load:
Loosen the lock nut (14) with the optional pin spanner and turn the adjusting nut (15) to increase the spring length. Do not increase to more than:
9.6 in (244 mm)

Each turn of the adjuster changes spring length and spring pre-load. One turn equals: spring length/spring pre-load:
0.06 in (1.5 mm) / 31.5 lbs (14.3 kg)

15. Tighten the lock nut and install the removed parts.

*To install the removed parts:*

1. Install the subframe. Tighten the bolts to the specified torque:
   Subframe upper bolt (12):
   20 lbf·ft (26 N·m , 2.7 kgf·m)
   Subframe lower bolts (10) (11):
   31 lbf·ft (42 N·m , 4.3 kgf·m)

   If a torque wrench is not used for this installation, see your Honda dealer as soon as possible to verify proper assembly.

2. Connect the tubes with air cleaner housing.
3. Connect the electrical connectors by matching the cable colors.
4. Reinstall the band and the clip.
5. Tighten the air cleaner connecting tube clamp and the rear brake fluid reservoir stay mount bolt.
6. Install the muffler and tighten the bolts. Be careful not to damage the packing installed inside the muffler clamp.
   Tighten to the specified torque:
   Muffler clamp bolt (1 ):
   15 lbf·ft (20 N·m , 2.0 kgf·m)
   Muffler bolt (lower) (2 ):
   24 lbf·ft (32 N·m , 3.3 kgf·m)
   Muffler bolt (upper) (3 ):
   24 lbf·ft (32 N·m , 3.3 kgf·m)

   If a torque wrench is not used for installation, see your Honda dealer as soon as possible to verify proper assembly.

7. Reinstall the side cover and seat.

## Rear Suspension Damping

Rebound Damping
The rebound damping adjuster is located at the lower end of the shock absorber.

It has at least 30 positions. Turning the adjuster one full turn advances the adjuster 8 positions.

To avoid damage to the damping adjuster, do not keep it in the full hard position.

*To adjust to the standard position:*

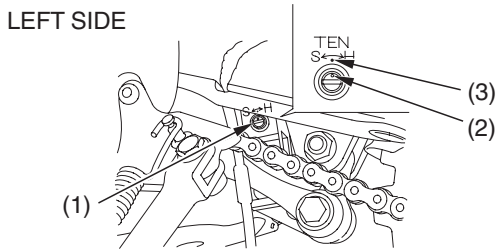


(1) rebound damping adjuster
(2) punch mark
(3) reference mark

1. Turn the adjuster ( 1 ) clockwise until it will no longer turn (lightly seats). This is the full hard position.
2. Turn the adjuster counterclockwise 11 - 15 clicks until the punch mark ( 2 ) on the adjuster aligns with the reference mark ( 3 ) at the lower end of the shock absorber. This is the standard position.

Compression Damping

The compression damping adjuster has at least 20 positions. Turning the adjuster one full turn advances the adjuster 4 positions.

*To adjust to the standard position:*

LEFT SIDE

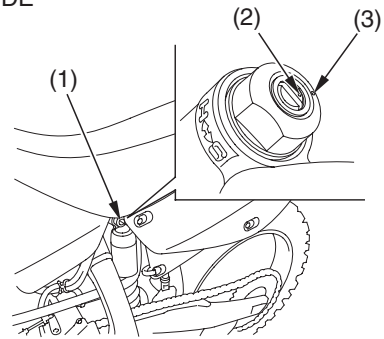


(1) compression damping adjuster
(2) punch mark
(3) reference mark

1. Turn the adjuster (1) clockwise until it will no longer turn (lightly seats). This is the full hard position.
2. Turn the adjuster counterclockwise 6 - 10 clicks until the punch mark (2) on the adjuster aligns with the reference mark (3). This is the standard position.

# Brakes

Refer to *Safety Precautions* on page 45.

Both the front and rear brakes are the hydraulic disc type. As the brake pads wear, the brake fluid level will drop. A leak in the system will also cause the level to drop.

Frequently inspect the system to ensure there are no fluid leaks. Periodically inspect the brake fluid level and the brake pads for wear.

If the front brake lever or rear brake pedal freeplay does not feel within the normal range while riding, check the brake pads. If they are not worn beyond the recommended limit (page 111), there is probably air in the brake system. See your Honda dealer to have the air bled from the system.

## Front Brake Lever Adjustment

RIGHT SIDE

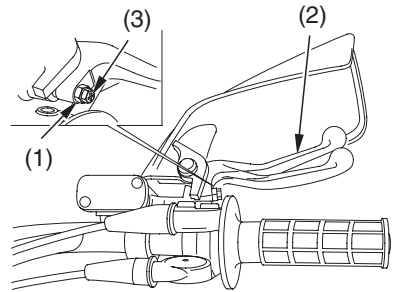


(1) lock nut
(2) front brake lever
(3) adjuster

Never use adjusters other than those designed for this motorcycle. Install a new adjuster from the lever side with the lock nut under the head of the adjuster.

1. Loosen the lock nut ( 1 ).
2. To position the front brake lever ( 2 ) farther away from the handgrip, turn the adjuster ( 3 ) clockwise.
   To position the front brake lever closer to the handgrip, turn the adjuster counterclockwise.
3. Tighten the lock nut.
4. Apply the brake, release it, then spin the wheel and check that it rotates freely. Repeat this procedure several times.
5. Check freeplay by pulling in slowly on the front brake lever until the brake starts to engage.
   Freeplay: 3/8－13/16 in (10－20 mm)

   If brake lever freeplay is not within this range, see your Honda dealer.

## Fluid Level Inspection

Front Brake Fluid Level

RIGHT HANDLEBAR

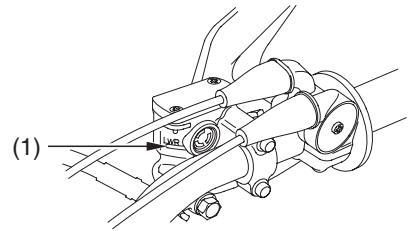


(1) LOWER level mark

With the motorcycle in an upright position, check the fluid level.
It should be above the LOWER level mark ( 1 ).
If the level is at or below the LOWER level mark, check the brake pads for wear (page 111 ).

Worn brake pads should be replaced. If the pads are not worn, have your brake system inspected for leaks.

The recommended brake fluid is Honda DOT 4 brake fluid from a sealed container, or an equivalent.

Rear Brake Fluid Level

RIGHT SIDE

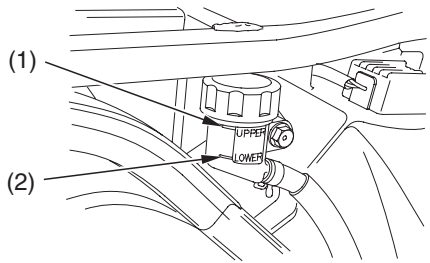


(1) UPPER level mark
(2) LOWER level mark

With the motorcycle in an upright position, check the fluid level.
It should be between the UPPER (1) and LOWER (2) level mark. If the level is at or below the LOWER level mark, check the brake pads for wear (page 111 ).

Worn brake pads should be replaced. If the pads are not worn, have your brake system inspected for leaks.

The recommended brake fluid is Honda DOT 4 brake fluid from a sealed container, or an equivalent.

Other Inspections

- Make sure there are no fluid leaks.
- Check for deterioration or cracks in the hoses and fittings.

## Brake Pad Wear

Brake pad wear depends on the severity of usage, the type of riding, and riding area conditions. (Generally, the pads will wear faster on wet and dirty riding terrain.) Inspect the pads at each regular maintenance interval (page 50 ).

LEFT FRONT

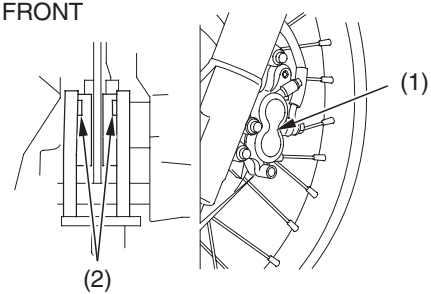


(1) front brake caliper
(2) cutouts

RIGHT REAR

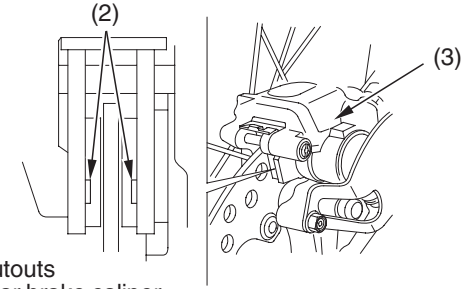


(2) cutouts
(3) rear brake caliper

Check the cutout ( 2 ) in each pad. If either pad is worn to the cutout, replace both pads as a set. See your Honda dealer for this service.

## Other Inspections

Check that the front lever and rear pedal assemblies are positioned properly and the securing bolts are tight.

## More About: Brake Fluid

Brake fluid should be added and replaced by your Honda dealer.

The recommended brake fluid is Honda DOT 4 Brake Fluid, or any brake fluid of equal equality and performance. Use fresh brake fluid from a sealed container.

Refer to *Safety Precautions* on page 45 .

Maintenance of spoke tension and wheel trueness (roundness) is critical to safe motorcycle operation. During the first 100 miles (150 km), spokes will loosen more rapidly due to the initial seating of the parts. Excessively loose spokes may result in instability at high speeds and the possible loss of control. Loose spokes may also cause rim or spoke damage (not covered by warranty). It's also important that the rim locks are secure to prevent tire slippage.

It is not necessary to remove the wheels to perform the recommended service in the Maintenance Schedule. However, information for wheel removal is provided for emergency situations.

## Wheel Rims & Spokes

REAR

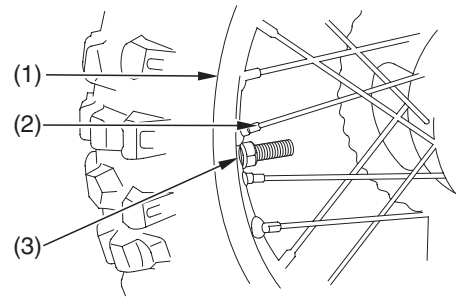


(1) wheel rim
(2) spoke
(3) rim lock

1. Inspect the wheel rims ( 1 ) and spokes ( 2 ) for damage.
2. Tighten any loose spokes or rim locks ( 3 ).

(cont'd)

3. Rotate the wheel slowly to see if it appears to ‘‘wobble.’’ If it does, the rim is out of round or not ‘‘true.’’ If the wobble is noticeable, see your Honda dealer for inspection.

## Front Wheel Removal

RIGHT FRONT

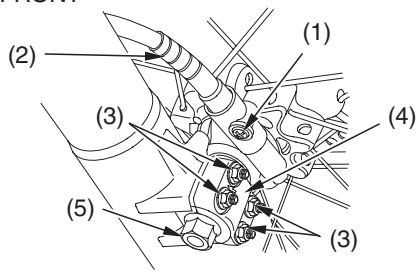


(1) tripmeter cable set screw
(2) tripmeter cable
(3) axle holder nuts
(4) axle holder
(5) front axle shaft

Removal

1. Raise the front wheel off the ground by placing a maintenance stand or support block under the engine. Secure the rear of the motorcycle with tie-down straps.
2. Remove the tripmeter cable set screw (1) and disconnect the tripmeter cable (2).
3. Remove the axle holder nuts (3) and the axle holder (4).
4. Unscrew and remove the front axle shaft (5). Remove the wheel.
   Avoid depressing the brake lever and brake pedal when the wheel is off the motorcycle. This will force the caliper pistons out of the cylinders. The result will be loss of brake fluid. If this occurs, the brake system will require service. See your Honda dealer for this service.

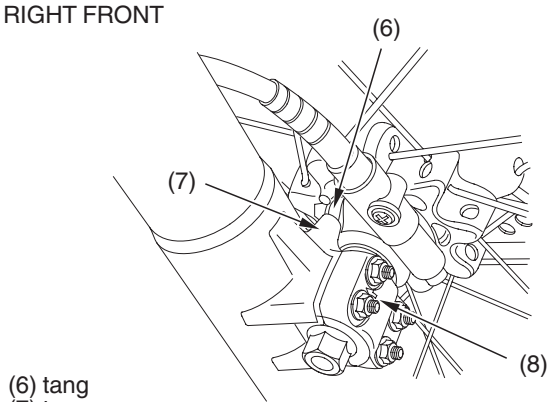


(6) tang
(7) tang
(8) UP mark

Installation

1. Reverse the removal procedure. Insert the axle through the wheel hub and left fork leg. Make sure the tang (6) on the tripmeter gearbox is located behind the tang (7) on the right fork leg.
2. Torque the front axle shaft to:
   65 lbf·ft (88 N·m , 9.0 kgf·m)
3. Install the axle holder with the UP mark (8) upward and first tighten the upper holder nuts to the specified torque, then tighten the lower axle holder nuts to the same torque:
   9 lbf·ft (12 N·m , 1.2 kgf·m)
4. After installing the wheel, apply the brake several times and then check if the wheel rotates freely. Recheck the wheel if the brake drags or if the wheel does not rotate freely. Check front brake adjustment (page 108 ).

If a torque wrench was not used to install the wheel, see your Honda dealer as soon as possible to verify proper assembly. Improper assembly may lead to loss of braking capacity.

## Rear Wheel Removal

RIGHT REAR

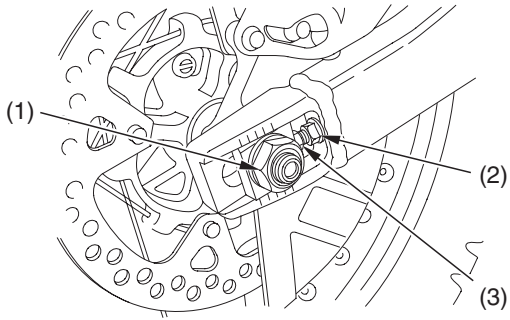


(1) rear axle nut
(2) lock nut
(3) adjusting bolt

LEFT REAR

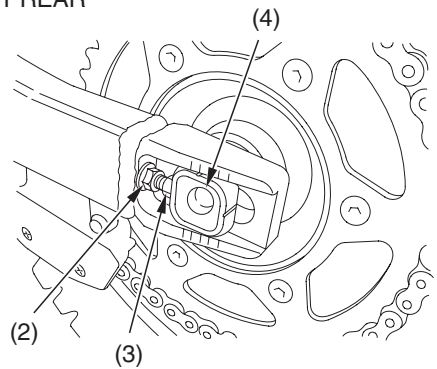


(2) lock nut
(3) adjusting bolt
(4) rear axle shaft

Removal

1. Raise the rear wheel off the ground by placing a maintenance stand or support block under the engine. Secure the front of the motorcycle with tie-down straps.
2. Remove the brake hose guide.
3. Loosen the rear axle nut ( 1 ).
4. Loosen the lock nuts (2 ) and turn the adjusting bolts (3 ) so the rear wheel can be moved all the way forward for maximum drive chain slack.
5. Move the rear wheel forward. Derail the drive chain from the driven sprocket.
6. Remove the rear axle nut and pull out the rear axle shaft (4 ).
7. Remove the rear wheel.
   Avoid depressing the brake lever and brake pedal when the wheel is off the motorcycle. This will force the caliper pistons out of the cylinders. The result will be loss of brake fluid. If this occurs, the brake system will require service. See your Honda dealer for this service.

RIGHT REAR

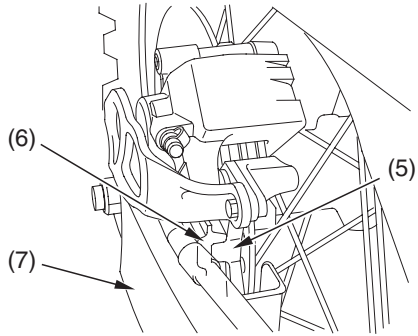


(5) lug
(6) slot
(7) swingarm

Installation

1. Reverse the removal procedure. Make sure the lug (5) on the brake caliper is located in the slot (6) in the swingarm (7). Check that the chain adjusters are installed properly.
2. Adjust the drive chain (page 127 ).
3. Torque the rear axle nut to:
   69 lbf·ft (93 N·m , 9.5 kgf·m)
4. Apply the rear brake, release it, then spin the wheel and check that it rotates freely. Repeat this procedure several times.

If a torque wrench was not used to install the wheel, see your Honda dealer as soon as possible to verify proper assembly. Improper assembly may lead to loss of braking capacity.

Refer to *Safety Precautions* on page 45.

To safely operate your motorcycle, the tires must be the proper type (off-road) and size, in good condition with adequate tread, and correctly inflated.

**⚠ WARNING**

Using tires that are excessively worn or improperly inflated can cause a crash in which you can be seriously hurt or killed.

Follow all instructions in this owner's manual regarding tire inflation and maintenance.

The following pages give detailed information on how and when to check your air pressure, how to inspect your tires for wear and damage, and our recommendations on tire repair and replacement.

## Air Pressure

Properly inflated tires provide the best combination of handling, tread life, and riding comfort. Generally, underinflated tires wear unevenly, adversely affect handling, and are more likely to fail from being overheated. Underinflated tires can also cause wheel damage in rocky terrain. Overinflated tires make your motorcycle ride harshly, are more prone to damage from surface hazards, and wear unevenly.

Make sure the valve stem caps are secure. If necessary, install a new cap.

# Tires & Tubes

Always check air pressure when your tires are ‘‘cold.’’ If you check air pressure when your tires are ‘‘warm’’ —even if your motorcycle has only been ridden for a few miles—the readings will be higher. If you let air out of warm tires to match the recommended cold pressures, the tires will be underinflated. The correct ‘‘cold’’ tire pressures are:

| | |
|---|---|
| Front | 15 psi (100 kPa , 1.0 kgf/cm²) |
| Rear | 15 psi (100 kPa , 1.0 kgf/cm²) |

If you decide to adjust tire pressures for a particular riding condition, make changes a little at a time.

## Inspection

A flat tire or blowout is inconvenient and may even cause an accident. Take time to inspect your tires and wheels before you ride. For more information about handling flat tires, see page 150.

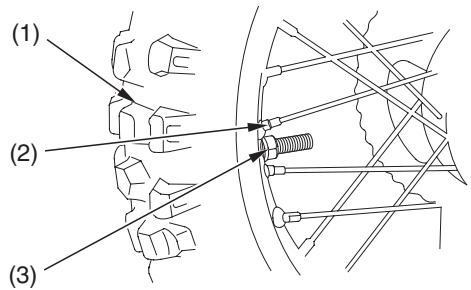


(1) tire tread depth
(2) spoke nut
(3) rim lock nut

- Inspect carefully for bumps or bulges in the side of the tire or the tread. Replace any tire that has a bump or bulge.
- Look closely for cuts, slits, or cracks in the tires. Replace a tire if you can see fabric or cord.
- Check for rocks or other objects embedded in the tire or tread. Remove any objects.
- Measure tread depth ( 1 ). Replace the tire before depth at the center reaches 0.12 in (3 mm), or any time you notice a reduction in traction.
- Check the position of both valve stems. A tilted valve stem indicates the tube is slipping inside the tire or the tire is slipping on the rim. See your Honda dealer.

## Tube Replacement

If a tube is punctured or damaged, you should replace it as soon as possible. A repaired tube may not have the same reliability as a new one, and it may fail while you are riding. For information on making a temporary repair, see page 150 .

Use a replacement tube equivalent to the original.

We recommend that tubes be replaced by your Honda dealer. Replacing a tube requires removing and reinstalling the wheel. Any time a tube is replaced, carefully inspect the tire as described on page 120 .

## Tire Replacement

The tires that came on your motorcycle were designed to provide a good combination of handling, braking, durability, and comfort across a broad range of riding conditions.

**⚠ WARNING**

Installing improper tires on your motorcycle can affect handling and stability. This can cause a crash in which you can be seriously hurt or killed.

Always use the size and type of tires recommended in this owner's manual.

| | |
|---|---|
| Front | 80/100-21M/C 51M |
| Rear | 110/100-18M/C 64M |
| Type | bias-ply, tube |

- Use a replacement tire equivalent to the original.
- Replace the tube any time you replace a tire. The old tube will probably be stretched and, if installed in a new tire, could fail.
- Have the wheel balanced after a new tire is installed.
- We recommend that tires be replaced by your Honda dealer.

Refer to *Safety Precautions* on page 45 .

LEFT SIDE

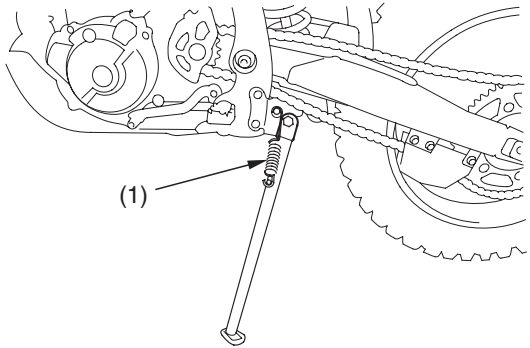


(1) side stand spring

1. Check the side stand spring ( 1 ) for damage and loss of tension.
2. Check the side stand assembly for freedom of movement.

If the side stand is stiff or squeaky, clean the pivot area and lubricate the pivot bolt with clean engine oil.

# Drive Chain

Refer to *Safety Precautions* on page 45.

The service life of the chain depends on proper lubrication and adjustment. Poor maintenance can cause premature wear or damage to the drive chain or sprockets.

Under severe usage, or when the motorcycle is ridden in unusually dusty or muddy areas, more frequent maintenance will be necessary.

Before servicing your drive chain, turn the engine OFF, lower the side stand, and check that your transmission is in neutral.

It is not necessary to remove or replace the drive chain to perform the recommended service in the Maintenance Schedule.

## Inspection

LEFT SIDE

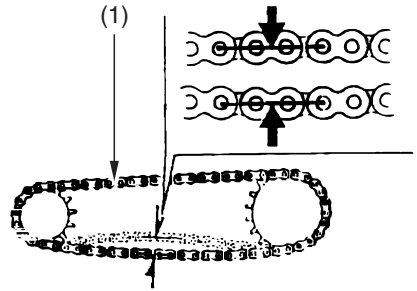


(1) drive chain

1. Check slack in the lower drive chain (1) run midway between the sprockets. Drive chain slack should allow the following vertical movement by hand:
   13/16－1 3/16 in (20－30 mm)

2. Check drive chain slack at several points along the chain. The slack should remain constant. If it isn't, some links may be kinked and binding. Lubricating the chain will often eliminate binding and kinking.

**NOTICE**

*Excessive chain slack may allow the drive chain to damage the engine cases.*

3. Inspect the drive chain for:
   - damaged rollers
   - loose pins
   - dry or rusted links
   - kinked or binding links
   - excessive wear
   - damaged or missing O-rings

   Replace the drive chain (page 129 ) if it has damaged rollers, loose pins, or kinks that cannot be freed. Lubricate the drive chain (page 128 ) if it appears dry or shows signs of rust. Lubricate any kinked or binding links and work them free. Adjust chain slack if needed.
4. Check the chain slipper ( 2 ), chain guide slider ( 3 ) and chain roller ( 4 ) for wear. If the chain slipper is worn to the bottom of the cutout ( 5 ), or the depth ( 6 ) of the groove in the chain slipper exceeds the depth limit, have your Honda dealer replace the slipper.
   Chain slipper depth limit:
   0.3 in (8 mm)
   Replace the chain guide slider if the chain is visible through the wear inspection window ( 7 ).
   Replace the chain roller if it is smaller than 1 in (25 mm).

(cont'd)

# Drive Chain

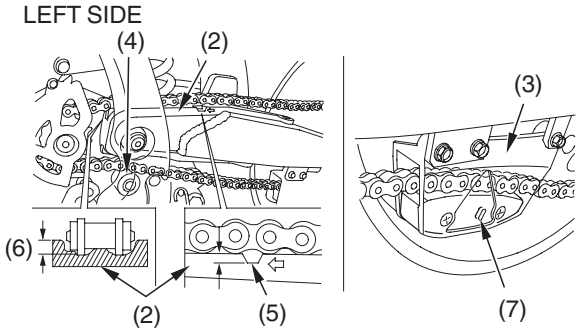


(2) chain slipper
(3) chain guide slider
(4) chain roller
(5) cutout
(6) depth
(7) wear inspection window

5. Replace the drive chain if chain slack is excessive when the rear axle is moved to the farthest limit of adjustment. Excessive slack indicates the chain is worn beyond its service limit.

To check the chain's service limit, measure the distance between a span of 41 pins, from pin center to pin center. If the distance exceeds the service limit, the drive chain is worn out and should be replaced.

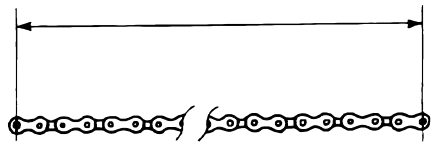

Measure a span of 41 pins

New Chain: 25.0 in (635 mm)
Service Limit: 25.1 in (638 mm)

This motorcycle has a staked master link drive chain which requires a special tool for cutting and staking. Do not use an ordinary master link with this chain.

6. Inspect the front and rear sprocket teeth for excessive wear or damage. If necessary, have your Honda dealer replace a worn sprocket.

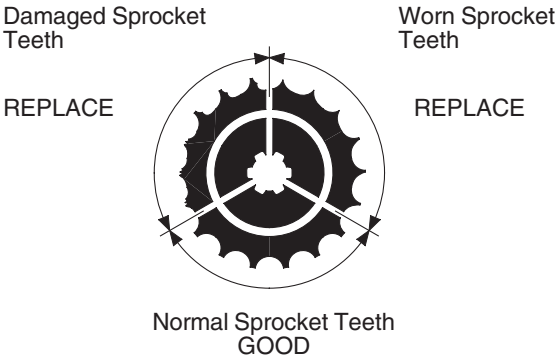


**NOTICE**

*Use of a new chain with worn sprockets will cause rapid chain wear.*

## Adjustment

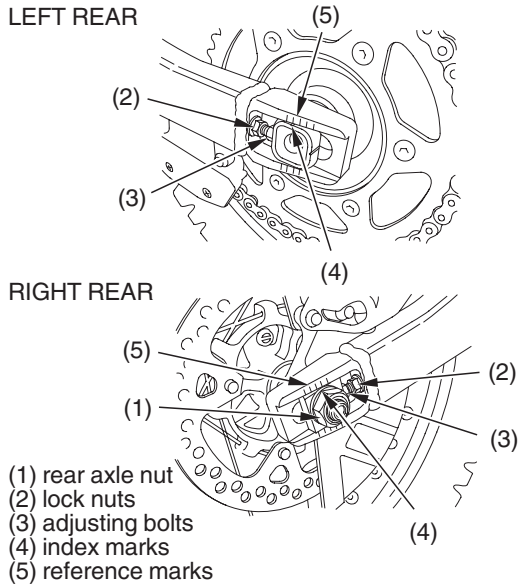

# Drive Chain

1. Loosen the rear axle nut (1).
2. Loosen the lock nuts (2) on both sides of the swingarm.
3. Turn the adjusting bolts (3) counterclockwise to decrease slack or clockwise to increase slack.
4. Align the index marks (4) with the reference marks (5) on both sides of the swingarm.
5. Torque the rear axle nut to:
   69 lbf·ft (93 N·m , 9.5 kgf·m)
   If a torque wrench is not used for this installation, see your Honda dealer as soon as possible to verify proper assembly.
6. Turn the adjusting bolts counterclockwise lightly until it touches the axle plate. Then tighten the lock nut by holding the adjusting bolt with a wrench.
7. Recheck drive chain slack.

## Lubrication

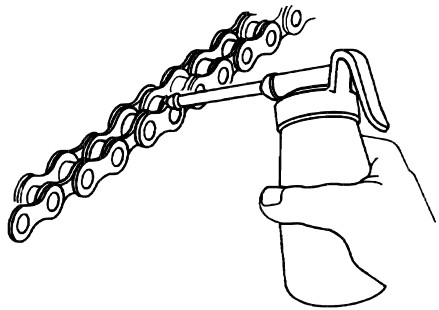

Lubricate every 300 miles (500 km) or sooner if chain appears dry.
The O-rings in this chain can be damaged by steam cleaning, high pressure washers, and certain solvents.

Lubricate only with SAE 80 or 90 gear oil. Commercial chain lubricants may contain solvents which could damage the rubber O-rings.

## Removal, Cleaning & Replacement

Your motorcycle has an endless (riveted master link) type chain. It should only be removed or replaced by your Honda dealer.

When the drive chain becomes extremely dirty, it should be cleaned prior to lubrication.

1. Clean the side surfaces of the chain with a dry cloth.
   Do not brush the rubber O-rings. Brushing will damage them. Use of a solvent may also damage the O-rings.
2. Inspect the drive chain for possible wear or damage. Replace the drive chain if it has damaged rollers, loose fitting links, or otherwise appears unserviceable.
   Replacement chain:
   D.I.D. 520VM or RK 520KZO

(cont'd)

3. Inspect the sprocket teeth for wear or damage. We recommend replacing the sprocket whenever a new chain is installed.
4. Lubricate the drive chain.

Refer to *Safety Precautions* on page 45.

## Headlight Bulb

FRONT

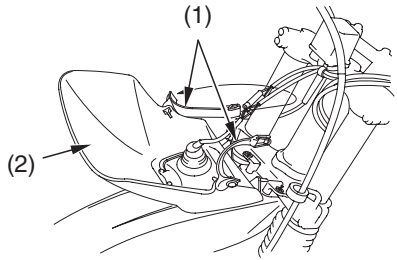


(1) headlight mount bands
(2) number plate

1. Remove the two headlight mount bands (1) and remove the front number plate (2).
2. Disengage the socket (3) from the headlight case (4). Remove the bulb (5) from the socket.

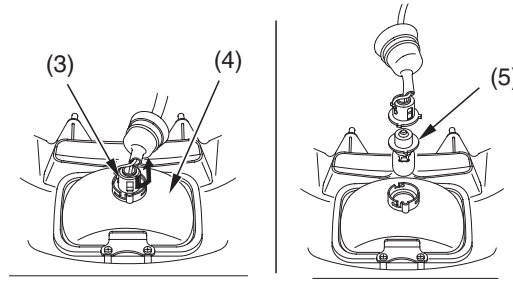


(3) socket
(4) headlight case
(5) bulb

3. Install a new bulb, aligning the tab on the bulb with the groove on the headlight case.
4. To install the headlight, reverse the removal procedure.

## Headlight Aim

FRONT

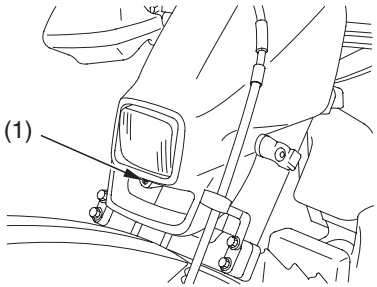


(1) adjusting screw

The headlight beam can be raised or lowered. Turn the adjusting screw (1) to move the headlight up or down to the proper adjustment.

## Taillight Bulb

LEFT REAR

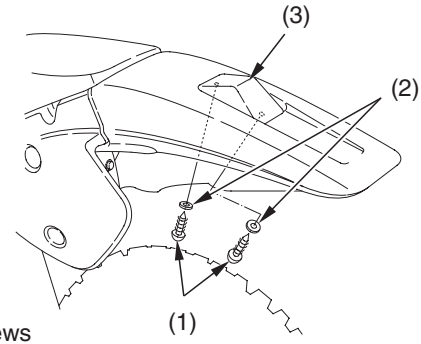


(1) screws
(2) washers
(3) lens

REAR

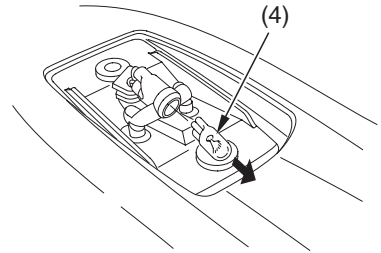


(4) bulb

1. Remove the screws (1) and washers (2).
2. Pull the lens (3) off. Replace the bulb (4) with a new one.
3. Reinstall the lens.

# Appearance Care

Refer to *Safety Precautions* on page 45.

Frequent cleaning and polishing will keep your Honda looking newer longer. Frequent cleaning also identifies you as an owner who values your motorcycle. A clean motorcycle is also easier to inspect and service.

While you're cleaning, be sure to look for damage, wear, and gasoline or oil leaks.

## General Recommendations

- To clean your motorcycle, you may use:
  - water
  - a mild, neutral detergent and water
  - a mild spray and wipe cleaner/polisher
  - a mild spray and rinse cleaner/degreaser and water
- Avoid products that contain harsh detergents or chemical solvents that could damage the metal, paint, and plastic on your motorcycle.
- If your motorcycle is still warm from recent operation, give the engine and exhaust system time to cool off.

- We recommend the use of a garden hose to wash your motorcycle. High pressure washers (like those at coin-operated car washes) can damage certain parts of your motorcycle. If you use a high pressure washer, avoid spraying the following areas:

  wheel hubs
  muffler outlet
  area under seat
  engine stop button
  brake master cylinders
  under fuel tank
  drive chain
  carburetor
  instruments

NOTICE

*High pressure water (or air) can damage certain parts of your motorcycle.*

## Washing Your Motorcycle with a Mild Detergent

1. Rinse your motorcycle thoroughly with cool water to remove loose dirt.
2. Fill a bucket with cool water. Mix in a mild, neutral detergent, such as dish washing liquid or a product made especially for washing motorcycles or automobiles.

(cont'd)

3. Wash your motorcycle with a sponge or a soft towel. As you wash, check for heavy grime. If necessary, use a mild cleaner/ degreaser to remove the grime.
4. After washing, rinse your motorcycle thoroughly with plenty of clean water to remove any residue.
5. Dry your motorcycle with a chamois or a soft towel.
6. Lubricate the drive chain to prevent rusting.
7. Start the engine and let it idle for several minutes. The engine heat will help dry moist areas.
8. As a precaution, ride at a slow speed and apply the brakes several times. This will help dry the brakes and restore normal braking performance.

# Tips

Here's helpful advice on how to prepare for an off-road adventure, how to transport and store your Honda, and how to be an environmentally responsible motorcycle owner.

Preparing for a Ride.....138
Transporting Your Honda.....140
Storing Your Honda.....142
You & the Environment.....145

# Preparing for a Ride

A safe and enjoyable ride begins with good planning and preparation. Always ride with at least one other person in case you have trouble, and let someone know where you're going and when you expect to return.

Before riding in an unfamiliar area, find out in advance if you need special permits, get maps so you can study the terrain, and talk to other riders who know the area. The Forest Service and the Bureau of Land Management (USA only), the Ministry of Natural Resources (Canada only), riding clubs, and off-road magazines are good sources of information.

## What to Take to the Riding Area

Along with your motorcycle and riding gear, you should take along some tools and supplies in case you have a problem. For some of the difficulties you might encounter, see *Taking Care of the Unexpected,* which begins on page 147 .

We recommend that you always take water, food, a first aid kit, and your owner's manual. Other items you should consider loading on your truck or trailer include:

- a tool kit
- tire repair supplies and tools, tubes, and tires
- extra parts, such as control levers, cables, and spark plugs
- wire, duct tape, and rope
- extra gasoline

For safety, all refueling should be done at a gas station on the way to the riding area or at your base camp.

## What to Take on the Trail

What you take with you during a ride depends on the kind of terrain, how long you expect to ride, how far you might go from your base camp or help, and how experienced you or your companions are in making repairs.

If you decide to take some tools, spare parts, or other supplies on the trail, be sure you can carry them safely and know how to use them. Also, be sure to follow the loading guidelines and weight limit (page 6 ).

# Transporting Your Honda

If you use a truck or motorcycle trailer to transport your Honda, we recommend that you follow these guidelines:

- Use a loading ramp.
- Make sure the fuel valve is off.
- Secure the motorcycle in an upright position, using motorcycle tie-down straps. Avoid using rope, which can loosen and allow the motorcycle to fall over.

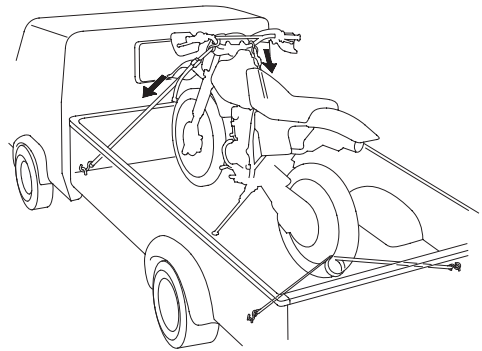

To secure your motorcycle, brace the front wheel against the front of the truck bed or trailer rail. Attach the lower ends of two straps to the tie-down hooks on your vehicle. Attach the upper ends of the straps to the handlebar (one on the right side, the other on the left), close to the fork.

Check that the tie-down straps do not contact any control cables or electrical wiring.

Tighten both straps until the front suspension is compressed about half-way. Too much pressure is unnecessary and could damage the fork seals.

Use another tie-down strap to keep the rear of the motorcycle from moving.

We recommend that you do not transport your motorcycle on its side. This can damage the motorcycle, and leaking gasoline could be a hazard.

# Storing Your Honda

If you won't be riding for an extended period, such as during the winter, thoroughly inspect your motorcycle and correct any problem before storing it. That way, needed repairs won't be forgotten and it will be easier to get your motorcycle running again.

For more information about storage, refer to the *Honda Motorcycle Winter Storage Guide,* available from your Honda dealer (USA only).

We suggest you perform the following procedures to keep your motorcycle in top condition. These storage procedures will reduce the deterioration that can occur during storage.

## Preparation for Storage

1. Change the engine oil and filter (page 68 ).
2. Make sure the cooling system is filled with a 50/50% antifreeze solution (page 73 ).
3. Fill the fuel tank. Make sure the fuel fill cap is properly installed.
4. Check that the fuel valve is OFF.
5. Drain the carburetor into an approved gasoline container and dispose of it in an approved manner (page 145 ). If storage will last longer than one month, carburetor draining is important, to assure proper performance after storage.

**⚠ WARNING**

Gasoline is highly flammable and explosive. You can be burned or seriously injured when handling fuel.

- Stop the engine and keep heat, sparks and flame away.
- Handle fuel only outdoors.
- Wipe up spills immediately.

6. Wash and dry your motorcycle.

(cont'd)

7. Lubricate the drive chain.
8. Inflate the tires to their recommended pressures (page 120 ).
9. Store your motorcycle in an unheated area, free of dampness, away from sunlight, with a minimum of daily temperature variation.
10. Cover your motorcycle with a porous material. Avoid using plastic or similar non-breathing, coated materials that restrict air flow and allow heat and moisture to accumulate.

## Removal from Storage

1. Uncover and clean your motorcycle.
2. If your motorcycle has been stored for more than four months－change the engine oil (page 68 ).
3. If your motorcycle has been stored for more than two months－drain and replace the fuel.
4. Lubricate the drive chain.
5. Perform a pre-ride inspection (page 24 ), then test-ride your motorcycle at low speeds.

# You & the Environment

Owning and riding a motorcycle can be enjoyable, but you must do your part to protect nature. When you show respect for the land, wildlife, and other people, you also help preserve the sport of off-road riding.

Following are tips on how you can be an environmentally-responsible motorcycle owner.

- **Tread Lightly.** Stay on existing roads and trails, avoid surfaces that are easily damaged, and ride only in areas approved for off-road vehicles.
- **Keep the Noise Down.** Loud motorcycles can be offensive. Ride as quietly as possible, don't remove your spark arrester, and don't modify the muffler or any other part of your air intake and exhaust systems. Such modifications not only increase noise, they also reduce engine performance and may be illegal.
- **Choose Sensible Cleaners.** Use a biodegradable detergent when you wash your motorcycle. Avoid aerosol spray cleaners that contain chlorofluorocarbons (CFCs) which damage the atmosphere's protective ozone layer. Don't throw cleaning solvents away; see the following guidelines for proper disposal.

(cont'd)

- **Recycle Wastes.** It's illegal and thoughtless to put used engine oil in the trash, down a drain, or on the ground. Used oil, gasoline, coolant, and cleaning solvents contain poisons that can hurt refuse workers and contaminate our drinking water, lakes, rivers, and oceans. Before changing your oil, make sure you have the proper containers. Put oil and other toxic wastes in separate sealed containers and take them to a recycling center. Call your local or state office of public works or environmental services to find a recycling center in your area and get instructions on how to dispose of non-recyclable wastes.

# Taking Care of the Unexpected

With all the challenges you can encounter off-road, there's a chance that sometime something may go wrong. This section gives practical advice to help you deal with a wide range of problems. Take time to read this section before you ride. Also review the tips in *Preparing for a Ride* (page 138 ).

General Guidelines.....148
If Your Engine Quits or Won't Start.....149
If You Have a Flat Tire.....150
If You Crash.....151
If a Component Fails .....152

# Taking Care of the Unexpected

## General Guidelines

If something goes wrong during a ride, the first thing to do is stop as soon as you safely can. Do not continue riding if you have a flat tire, or you hear an unusual noise, or your motorcycle just doesn't feel right. If you continue riding, you could cause more damage and endanger your own safety.

After a stop, take time to assess the situation. Carefully inspect your motorcycle to identify the problem, then consider your options before you decide what to do.

If a problem is relatively minor and you have the tools, supplies, and skills to make a permanent repair, you may be able to fix it on the trail and continue riding. Or, you may be able to make a temporary repair that allows you to slowly ride back to your base where you can make a permanent repair or get help.

When a problem is more serious—or you don't have the tools, supplies, experience, or time to deal with it—you need to choose the safest way to get yourself and your motorcycle back to base. For example, if you are close enough, you (or you and another person) might be able to push it back.

Whatever the problem, the most important rules are:

- Always put personal safety first.

- If the problem is relatively minor and you have the tools, supplies, and skills to make a temporary repair, be sure to have permanent repairs made as soon as possible.
- Do not continue riding if you are hurt or your motorcycle is not in safe riding condition.

Additional recommendations for specific problems follow.

## If Your Engine Quits or Won't Start

If the engine wasn't making any unusual noises before it quit running, and it feels normal when you operate the kickstarter, you can probably rule out a major mechanical problem.

The next area to check is the fuel system:

- Make sure there is enough gas in the tank and the fuel valve is at the ON or RESERVE position.
- Check the fuel fill cap vent tube to see if it is pinched or obstructed.
- Turn the fuel valve OFF, disconnect the fuel line that goes from the fuel valve to the carburetor, then momentarily turn the fuel valve ON. If fuel does not flow out, there is an obstruction in the fuel tank or the fuel valve.

If the fuel system appears to be okay, check the ignition system (this requires a spark plug wrench):

(cont'd)

- Check that the spark plug cap isn't loose or disconnected.
- Disconnect the spark plug cap and remove the spark plug. Connect the spark plug cap to the spark plug and ground the threaded portion of the spark plug on the cylinder head.
- Operate the kickstarter while you watch the spark plug. If it sparks, the ignition system is probably working. If there is no spark, install a new spark plug, if you have one with you. If there is still no spark, there is a problem in the ignition system.

If you cannot identify or correct the problem, you will have to push your motorcycle back to your base or get some help.

## If You Have a Flat Tire

How you handle a flat tire on the trail depends on how serious the tube or tire damage is, and what tools and supplies you have with you.

If you have a slow leak or a minor puncture, there are two ways to try making a temporary repair:

- Use an aerosol tire sealer to seal the puncture and inflate the tube. (This can be done without removing the tire or wheel.)
- Use a tube patch kit to repair the puncture. (This requires removing the tire.)

If the leak is more serious, or a temporary repair doesn't hold, the tube must be replaced. The tire will also need to be replaced if it is damaged (page 121 ). Replacing a tube or tire involves removing and re-installing the wheel (pages 115, 117 ).

If you are unable to repair a flat tire on the trail, you will need to push the motorcycle back to your base or send for help. We strongly recommend that you do not try to ride with a flat tire. The motorcycle will be hard to handle, and if the tire comes off the rim, it may lock up the wheel and cause you to crash.

## If You Crash

Personal safety is your first priority after an accident. If you or anyone else has been injured, take time to assess the severity of the injuries and whether it is safe to continue riding. If you cannot ride safely, send someone for help. Do not ride if you will risk further injury.

If you decide you are capable of riding safely, carefully inspect your motorcycle for damage and determine if it is safe to ride. Check the tightness of critical nuts and bolts securing such parts as the handlebar, control levers, brakes, and wheels.

If there is minor damage, or you are unsure about possible damage but decide to try riding the motorcycle back to your base, ride slowly and cautiously.

Sometimes, crash damage is hidden or not immediately apparent. When you get home, thoroughly check your motorcycle and correct any problems you find. Also, be sure to have your Honda dealer check the frame and suspension after any serious crash.

## If a Component Fails

The drive chain, brake lever or pedal, control cables, and other components can be damaged as you ride in dense brush or over rocky terrain. Making a trailside repair depends on how serious the damage is and what tools and supplies you have with you.

- If the chain breaks or does other damage when it comes off, you may not be able to make a trailside repair.

- If any component of the front brake system is damaged, you may be able to ride carefully back to your base using the rear brake for slowing or stopping.
- If the clutch lever breaks, you may be able to temporarily switch the front brake lever to the clutch side, then ride carefully back to base using the rear brake for slowing or stopping.
- If you damage a throttle cable or other critical component, your motorcycle may be unsafe to ride. Carefully assess the damage and make any repairs that you can. But if there is any doubt, it's best to be conservative and safe.

# Technical Information

This section contains dimensions, capacities, and other technical data, plus information on government requirements and how to break-in your motorcycle.

Vehicle Identification .....156
Specifications.....158
Break-in Guidelines .....163
High Altitude Carburetor Adjustment .....164
Emission Control Systems .....165
Oxygenated Fuels.....169

# Vehicle Identification

## Serial Numbers

The VIN and engine serial numbers are required when you register your motorcycle. They may also be required when ordering replacement parts. You may record these numbers in the *Quick Reference* section at the rear of the manual.

The VIN ( 1 ) is stamped on the right side of the steering head.

The engine number ( 2 ) is stamped on the left crankcase.

RIGHT SIDE

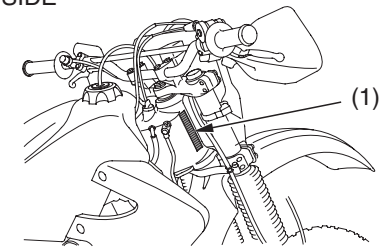


(1) VIN

LEFT SIDE

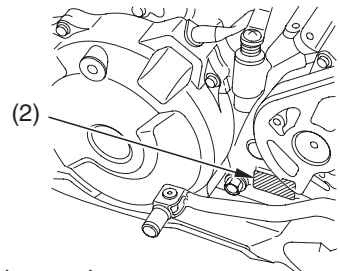


(2) engine number

## Color Label & Code

The color label ( 1 ) is attached to the frame behind the left side cover (page 58 ).

The color code is helpful when ordering replacement parts. You may record the color and code in the *Quick Reference* section at the rear of the manual.

BEHIND LEFT SIDE COVER

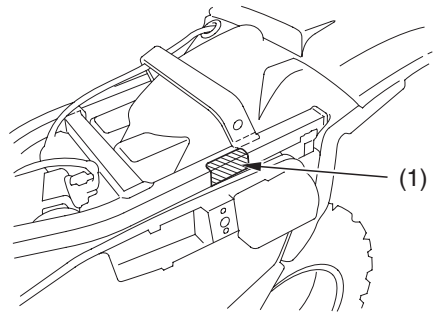


(1) color label

# Specifications

| Dimensions | |
|---|---|
| Overall length | 86.4 in (2,195 mm) |
| Overall width | 32.5 in (825 mm) |
| Overall height | 48.8 in (1,240 mm) |
| Wheelbase | 58.1 in (1,475 mm) |

| Fuel & Lubricants | |
|---|---|
| Fuel tank capacity | 2.64 US gal (10.0 ℓ) including reserve |
| Fuel tank reserve | 0.53 US gal (2.0 ℓ) |
| Fuel recommendation | unleaded gasoline, pump octane number of 91 or higher |

| Fuel & Lubricants | |
|---|---|
| Cooling system capacity | 1.82 US qt (1.72 ℓ) |
| Cooling system recommendation | Pro Honda HP Coolant or an equivalent high quality ethylene glycol antifreeze containing corrosion protection inhibitors specifically recommended for use in aluminum engines |
| Engine oil capacity | 1.65 US qt (1.56 ℓ) after draining<br>1.7 US qt (1.6 ℓ) after draining & oil filter change<br>2.1 US qt (2.0 ℓ) after disassembly |

| Fuel & Lubricants | |
|---|---|
| Engine oil recommendation | API Service Classification SG or higher except oils labeled as energy conserving on the circular API service label, SAE 10W-30, JASO T 903 standard MA, Pro Honda GN4 or HP4 (without molybdenum additives) 4-stroke oil (USA & Canada) or Honda 4-stroke oil (Canada only), or an equivalent motorcycle oil |
| Drive chain lubricant | SAE 80 or 90 gear oil |

| Fuel & Lubricants | |
|---|---|
| Air cleaner oil | Pro Honda (USA only) or Honda (Canada only) Foam Filter Oil or an equivalent |

| Capacities | |
|---|---|
| Passenger capacity | operator only; no passenger |
| Maximum weight capacity | 220 lbs (100 kg) |
| Cargo capacity | none |
| Fork oil capacity (each side) | 21.5 US oz (637 $cm^3$) |

| Engine Specifications | |
|---|---|
| Displacement | 39.6 cu-in (649 $cm^3$) |
| Bore & stroke | 3.94 × 3.25 in (100 × 82.6 mm) |
| Compression ratio | 10.0 : 1 |

# Specifications

| Engine Specifications | |
|---|---|
| Valve clearance (cold) | Intake: 0.006 in (0.15 mm)<br>Exhaust: 0.008 in (0.20 mm) |
| Spark plug (standard) | BKR7E-11 (NGK) or K22PR-U11 (DENSO) |
| Spark plug (extended high speed riding) | BKR8E-11 (NGK) or K24PR-U11 (DENSO) |
| Spark plug gap | 0.039－0.043 in (1.00－1.10 mm) |
| Idle speed | 1,400 ± 100 rpm |

| Power Transmission | |
|---|---|
| Primary reduction | 1.651 |
| Gear ratio, 1st | 3.083 |
| 2nd | 2.125 |
| 3rd | 1.666 |
| 4th | 1.333 |
| 5th | 1.115 |
| Final reduction | 3.429 |
| Standard sprocket sizes | drive (engine) sprocket: 14 teeth<br>driven (rear wheel) sprocket: 48 teeth |
| Final drive | chain<br>D.I.D. 520VM or RK 520KZO |

| Power Transmission | |
|---|---|
| Drive chain freeplay | 13/16－1 3/16 in (20－30 mm) |
| New chain length | 25.0 in (635 mm) distance between a span of 41 pins |
| Used chain service limit length | 25.1 in (638 mm) distance between a span of 41 pins |

| Chassis & Suspension | |
|---|---|
| Caster | 27°47′ |
| Trail | 4.4 in (111 mm) |
| Tire size, front | 80/100-21M/C 51M |
| Tire size, rear | 110/100-18M/C 64M |
| Tire type | bias-ply, tube |
| Tire pressure, front (cold) | 15 psi (100 kPa , 1.0 kgf/cm²) |
| Tire pressure, rear (cold) | 15 psi (100 kPa , 1.0 kgf/cm²) |
| Suspension, front | 11.2 in (285 mm) cushion stroke |
| Suspension, rear | 12.1 in (308 mm) axle travel |

# Specifications

| Electrical | |
|---|---|
| Alternator | 0.074 kW/5,000 rpm |

| Lights | |
|---|---|
| Headlight | 12V-35W |
| Taillight | 12V-3.4W |

| Torque Specifications | |
|---|---|
| Fork caps | 22 lbf·ft (30 N·m , 3.1 kgf·m) |
| Crankcase drain bolt | 18 lbf·ft (24 N·m , 2.4 kgf·m) |
| Frame drain bolt | 19 lbf·ft (26 N·m , 2.7 kgf·m) |
| Oil filter bolt | 9 lbf·ft (12 N·m , 1.2 kgf·m) |
| Rear wheel axle | 69 lbf·ft (93 N·m , 9.5 kgf·m) |
| Front wheel axle | 65 lbf·ft (88 N·m , 9.0 kgf·m) |
| Front wheel axle holder nuts | 9 lbf·ft (12 N·m , 1.2 kgf·m) |

# Break-in Guidelines

Help assure your motorcycle's future reliability and performance by paying extra attention to how you ride during the first operating day or 15 miles (25 km).
During this period, avoid full-throttle starts and rapid acceleration.

# High Altitude Carburetor Adjustment

At high altitude, the standard carburetor air-fuel mixture will be too rich. Performance will decrease, and fuel consumption will increase. A very rich mixture will also foul the spark plug and cause hard starting. Operation at an altitude that differs from that at which this engine was certified, for extended periods of time, may increase emissions.

High altitude performance can be improved by specific modifications to the carburetor. If you always operate your engine at altitudes above 6,500 feet (2,000 meters), have your servicing dealer perform this carburetor modification. This engine, when operated at high altitude with the carburetor modifications for high altitude use, will meet each emission standard throughout its useful life.

Even with carburetor modification, engine horsepower will decrease about 3.5% for each 1,000-foot (300-meter) increase in altitude. The effect of altitude on horsepower will be greater than this if no carburetor modification is made.

**NOTICE**

*When the carburetor has been modified for high altitude operation, the air-fuel mixture will be too lean for low altitude use. Operation at altitudes below 5,000 feet (1,500 meters) with a modified carburetor may cause the engine to overheat and result in serious engine damage. For use at low altitudes, have your servicing dealer return the carburetor to original factory specifications.*

**Exhaust Emission Requirements (USA only)**
The U.S. Environmental Protection Agency (EPA) and the California Air Resources Board (CARB) require that your motorcycle comply with applicable exhaust emission standards during its useful life, when operated and maintained according to the instructions provided.

The Vehicle Emission Control Information Label ( 1 ) is attached to the rear fender.

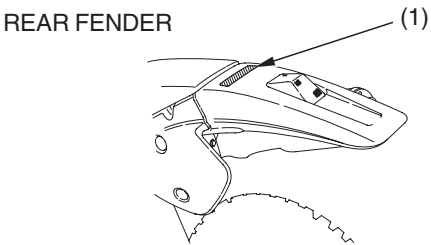


(1) vehicle emission control information label

**Noise Emission Requirements**
The EPA also requires that motorcycles built after January 1, 1983 comply with applicable noise emission standards for one year or 1,865 miles (3,000 km) after the time of sale to the ultimate purchaser, when operated and maintained according to the instructions provided. (USA only)

**Source of Emissions**
The combustion process produces carbon monoxide (CO), oxides of nitrogen (NOx), and hydrocarbons (HC). Control of hydrocarbons and oxides of nitrogen is very important because, under certain conditions, they react to form photochemical smog when subjected to sunlight. Carbon monoxide does not react in the same way, but it is toxic.

Honda Motor Co., Ltd. utilizes various systems to reduce carbon monoxide, oxides of nitrogen and hydrocarbons.

# Emission Control Systems

**Exhaust Emission Control System**
The exhaust emission control system is composed of appropriate carburetor settings. No adjustments should be made except for an idle speed adjustment with the throttle stop screw or carburetor adjustment for high altitude operation. The exhaust emission control system is separate from the crankcase emission control system.

***Secondary Air Injection System***
Secondary air injection system which introduces filtered air into the exhaust gases in the exhaust port. The secondary air injection system helps improve emission performance.

**Crankcase Emission Control System**
The engine is equipped with a closed crankcase system to prevent discharging crankcase emissions into the atmosphere.
Blow-by gas is returned to the combustion chamber through the air cleaner and the carburetor.

**Noise Emission Control System**

TAMPERING WITH THE NOISE CONTROL SYSTEM IS PROHIBITED: U. S. federal law prohibits, or Canadian provincial laws may prohibit the following acts or the causing thereof: (1) The removal or rendering inoperative by any person, other than for purposes of maintenance, repair or replacement, of any device or element of design incorporated into any new vehicle for the purpose of noise control prior to its sale or delivery to the ultimate purchaser or while it is in use; or (2) the use of the vehicle after such device or element of design has been removed or rendered inoperative by any person.

AMONG THOSE ACTS PRESUMED TO CONSTITUTE TAMPERING ARE THE ACTS LISTED BELOW:

1. Removal of, or puncturing the muffler, baffles, header pipes, or any other component which conducts exhaust gases.
2. Removal of, or puncturing of any part of the intake system.
3. Lack of proper maintenance.
4. Replacing any moving parts of the vehicle, or parts of the exhaust or intake system, with parts other than those specified by the manufacturer.

**Problems that May Affect Motorcycle Emissions**

If you are aware of any of the following symptoms, have the vehicle inspected and repaired by your Honda Motorcycle Dealer:

1. Hard starting or stalling after starting
2. Rough idle
3. Misfiring or backfiring during acceleration
4. After-burning (backfiring)
5. Poor performance (driveability) and poor fuel economy

Federal regulations prohibit removing or disabling a device or element of design that may affect your engine's emission performance unless your motorcycle will be used exclusively in competition. If you modify your engine for use in sanctioned competition events, you must deface or destroy the emission control information label.

# Oxygenated Fuels

Some conventional gasolines are being blended with alcohol or an ether compound. These gasolines are collectively referred to as oxygenated fuels. To meet clean air standards, some areas of the United States and Canada use oxygenated fuels to help reduce emissions.

If you use an oxygenated fuel, be sure it is unleaded and meets the minimum octane rating requirement.

Before using an oxygenated fuel, try to confirm the fuel's contents. Some states/provinces require this information to be posted on the pump.

The following are the EPA-approved percentages of oxygenates:

ETHANOL (ethyl or grain alcohol) 10% by Volume
You may use gasoline containing up to 10% ethanol by volume. Gasoline containing ethanol may be marketed under the name ''Gasohol''.

MTBE (Methyl Tertiary Butyl Ether) 15% by Volume
You may use gasoline containing up to 15% MTBE by volume.

METHANOL (methyl or wood alcohol) 5% by Volume
You may use gasoline containing methanol containing up to 5% methanol by volume as long as it contains cosolvents and corrosion inhibitors to protect the fuel system. Gasoline containing more than 5% methanol by volume may cause starting and/or performance problems. It may also damage metal, rubber, and plastic parts of your fuel system.

# Oxygenated Fuels

If you notice any undesirable operating symptoms, try another service station or switch to another brand of gasoline.

Fuel system damage or performance problems resulting from the use of an oxygenated fuel containing more than the percentages of oxygenates mentioned above are not covered under warranty.

Oxygenated fuels can damage paint and plastic. Be careful not to spill fuel when filling the fuel tank. Wipe up any spills immediately.

NOTICE

*Oxygenated fuels can damage paint and plastic. Damage caused by spilled fuel is not covered under warranty.*

# Consumer Information

This section contains information on your warranty and how to get an official Honda service manual.

Authorized Manuals.....172
Warranty Coverage .....175
Warranty Service.....176
Contacting Honda .....177
The Honda Rider's Club (USA only) .....178
Your Honda Dealer.....180

# Authorized Manuals

The Service Manual used by your authorized Honda dealer is available from Helm, Inc. (USA only, Canada: See your Honda dealer to order authorized manuals.)

Also available but not necessary to service your model is the Honda Common Service Manual which explains theory of operation and basic service information for various systems common to all Honda motorcycles, motor scooters and ATVs.

These Honda manuals are written for the professional technician, but most mechanically-capable owners should find them easy to use if they have the proper tools and observe proper safety standards. Special Honda tools are necessary for some procedures.

| Publication Item No. | Description | Price Each* |
|---|---|---|
| 61MBN07 | 2007 XR650R Service Manual | $48.00 |
| 61CM002 | Common Service Manual | $48.00 |
| 31MBN670 | 2007 XR650R Owner's Manual | $16.00 |
| **Prices are subject to change without notice and without incurring obligation.* | | |

**Order On-Line: www.helminc.com**

**Order Toll Free: 1-888-CYCLE93** (1-888-292-5393)

*(NOTE: For Credit Card Orders Only)*

Monday — Friday 8:00 AM — 6:00 PM EST

**OR**

By completing this form you can order the materials desired. You can pay by check or money order, or charge to your credit card. Mail to Helm, Inc. at the address shown on the back of this order form (USA only).

Canada: See your Honda dealer to order authorized manuals.

| Publication Item No. | Item Description | Qty. | Price Each* | Total Price |
|---|---|---|---|---|
| | | | | |
| | | | | |
| | | | | |
| *Prices are subject to change without notice and without incurring obligation.<br><br>Orders are mailed within 10 days. Please allow adequate time for delivery. | | **Sub Total** | | |
| | | **Purchaser's Sales Tax**<br>**Mich. Add 6 %**<br>**Calif. Add 8.25 %** | | |
| | | **Handling Charge** | | **$5.00** |
| | | **Grand Total** | | |

**SHIP TO**

NOTE: Dealers and Companies please provide dealer or company name, and also the name of the person to whose attention the shipment should be sent.

Customer Name _____ Attention _____

Street Address - No P. O. Box Number _____ Apartment Number _____

City _____ State _____ Zip Code _____

Daytime Telephone Number (  ) _____

**PAYMENT**

☐ Check or money order enclosed payable to Helm Inc. U.S. funds only. Do not send cash.

☐ Check here if your billing address is different from the shipping address shown above.

☐ MasterCard

☐ VISA

☐ Discover

Account Number ☐☐☐☐ ☐☐☐☐ ☐☐☐☐ ☐☐☐☐

Expiration: Mo. Yr. ☐ — ☐

Customer Signature _____ Date _____

These Publications cannot be returned for credit without receiving advance authorization within 14 days of delivery. On returns, a restocking fee may be applied against the original order.

**HELM** P.O. BOX 07280, DETROIT, MICHIGAN 48207

# Warranty Coverage

Your new Honda is covered by these warranties:

- Motorcycle Limited Warranty
- Exhaust Emission Warranty (USA only)
- Noise Control Warranty (USA only)

There are responsibilities, restrictions, and exclusions which apply to these warranties. Please read the Honda Motorcycle Warranties Booklet given to you by your Honda dealer at the time of purchase. Be sure to keep your Honda owner's card (USA only) with your Warranties Booklet.

It is important to realize that your warranty for your Honda applies to defects in material or factory workmanship. Your warranty coverage does not apply to normal wear or deterioration associated with using the motorcycle.

Your warranty coverage will not be voided if you choose to perform your own maintenance. However, you should have the proper tools and service information and be mechanically qualified. Failures that occur due directly to improper maintenance or lack of maintenance are not covered.

Almost all of your warranty coverage can be extended through the Honda Protection Plan (USA only). For more information, see your Honda dealer.

# Warranty Service

Please remember that recommended maintenance interval servicing is not included in your warranty coverage. Additionally, your warranty does not apply to the normal wear of items (such as brakes, tires, etc.).

If you believe you have a problem with your Honda, call the service department of your Honda dealer. Make an appointment for an inspection and diagnosis. Remember, as the owner of the motorcycle, you will be asked to authorize that inspection. Your dealer will give you the results of the inspection. If the problem is covered under warranty, your dealer will perform the warranty repairs for you.

If you have questions about warranty coverage or the nature of the repair, it is best to talk to the service manager of your Honda dealer.

Sometimes, in spite of the best intentions of all concerned, a misunderstanding may occur. If you aren't satisfied with your dealer's handling of the situation, we suggest you discuss your problem with the appropriate member of the dealership's management team. If the problem has already been reviewed with the Service Manager, Parts Manager, Sales Manager, etc., contact the Owner of the dealership or his designated representative.

# Contacting Honda

Your owner's manual was written to cover most of the questions you might ask about your Honda. Any questions not answered in the owner's manual can be answered by your Honda dealer. If he doesn't have the answer right away, he will get it for you.

If you have a difference of opinion with your dealer, please remember that each dealership is independently owned and operated. That's why it's important to work to resolve any differences at the dealership level.

If you wish to comment on your experiences with your Honda or with your dealer, please send your comments to the following address (USA only):

Motorcycle Division, American Honda Motor Co., Inc., P.O. Box 2220, Torrance, CA 90509-2220, mailstop: 100-4C-7B, telephone: (866) 784-1870.

Canada: Refer to the warranty booklet that was supplied with your vehicle.

Please include the following information in your letter:

- name, address, and telephone number
- product model, year, and VIN
- date of purchase
- dealer name and address

We will likely ask your Honda dealer to respond, or possibly acknowledge your comments directly.

# The Honda Rider's Club (USA only)

One of the best ways to get the most enjoyment from owning and riding your Honda is through the Honda Rider's Club of America. Your purchase of a new motorcycle, scooter, ATV or PWC from a participating U.S. Honda dealer entitles you to a complimentary one-year membership in the Club. There are hundreds of HRCA Chapter-sponsoring dealers across the USA with events and activities almost every weekend. Membership benefits include:

- 24-hour, toll-free roadside assistance for your new Honda (includes roadside assistance for your transport vehicle [up to one ton] as long as your Honda is aboard or in tow). *For street-legal motorcycles and scooters only.*
- An exclusive HRCA website complete with access to the official Honda Common Service Manual, contests, insider information and more.
- Reimbursement (up to $75) for successful completion of a Motorcycle Safety Foundation training course. Separate, complimentary training from the Specialty Vehicle Institute of America for purchasers of new ATVs.
- One full year of *Honda Red Rider* magazine (six issues).
- Discounts from HRCA partners for experienced rider courses.
- Discounted vehicle insurance from the HRCA's insurance partner.
- Racing contingency programs and assistance at selected dual-sport, off-road and motocross events for off-road motorcycles and selected ATVs.

# The Honda Rider's Club (USA only)

*If you purchased an off-road motorcycle, ATV or PWC, your benefits do not include roadside assistance or trip interruption protection.*

Contact your Honda dealer for more information or call:
1-800-847-4722 or log on to www.hrca.honda.com.

# Your Honda Dealer

Once you purchase your new Honda, get familiar with the organization of your Honda dealer so you can utilize the full range of services available.

The service department is there to perform regular maintenance and unexpected repairs. It has the latest available service information from Honda. The service department will also handle warranty inspections and repairs.

The parts department offers Genuine Honda parts, Pro Honda products, Hondaline accessories (USA only), and Honda accessories and products (Canada only). The same quality that went into your Honda can be found in Genuine Honda replacement parts. You'll also find comparable quality in the accessories and products available from the parts department.

The sales department offers the Honda Protection Plan to extend almost all of your warranty coverage (USA only).

Your dealer can inform you about competition and other riding events in your area. You'll also find that your dealer is a source of information (USA only) about American Honda's Rider Education Centers and the Honda Rider's Club of America.

We're sure you'll be as pleased with the service your Honda dealer continues to provide after the sale as you are with the quality and dependability of your Honda.

# Table of Contents

The following presents the contents of each section of your owner's manual.

**MOTORCYCLE SAFETY .....1**
Important Safety Information .....2
Loading, Accessories & Modifications .....5
Loading .....5
Accessories & Modifications.....7
Safety Labels.....9

**OPERATING CONTROLS.....11**
Operation Component Locations.....12
Fuel Valve .....15
Choke Lever.....16
Engine Stop Button .....17
Front Brake Lever .....17
Throttle.....17
Clutch Lever.....17
Shift Lever .....18
Rear Brake Pedal.....18
Kickstarter .....18
Starter Decompressor Lever .....18
Side Stand .....19
Tripmeter.....19

**BEFORE RIDING .....21**
Are You Ready to Ride ? .....22
Protective Apparel .....22
Is Your Motorcycle Ready to Ride ? .....24
Pre-ride Inspection .....24

# Table of Contents

**BASIC OPERATION & RIDING.....27**
Safe Riding Precautions.....28
Starting & Stopping the Engine.....29
Preparation .....29
Starting Procedure.....29
Starter Decompressor Lever .....32
Flooded Engine .....33
How to Stop the Engine.....34
Shifting Gears .....35
Braking.....37
Parking .....39
Post-ride Inspection .....40

**SERVICING YOUR HONDA.....41**
*Before You Service Your Honda*
The Importance of Maintenance.....43
Maintenance Safety.....45
Important Safety Precautions.....45
Maintenance Schedule .....47
Maintenance Record .....51
Competition Inspection.....52

*Service Preparations*
Maintenance Component Locations .....55
Side Cover Removal .....58
Seat Removal .....60

(cont'd)

# Table of Contents

**SERVICING YOUR HONDA (cont'd)**
*Service Procedures*
Fluids & Filters
Fuel....61
Engine Oil....64
Coolant....73
Air Cleaner....76

Engine
Throttle....79
Clutch System....82
Engine Idle Speed....85
Spark Plug....86
Spark Arrester....88

Chassis
Suspension....90
Brakes....108
Wheels....113
Tires & Tubes....119
Side Stand....123
Drive Chain....124
Headlight & Taillight....131

Appearance Care....134

**TIPS....137**
Preparing for a Ride....138
Transporting Your Honda....140
Storing Your Honda....142
You & the Environment....145

# Table of Contents

**TAKING CARE OF THE UNEXPECTED .....147**
General Guidelines.....148
If Your Engine Quits or Won't Start .....149
If You Have a Flat Tire.....150
If You Crash.....151
If a Component Fails .....152

**TECHNICAL INFORMATION .....155**
Vehicle Identification .....156
Specifications.....158
Break-in Guidelines .....163
High Altitude Carburetor Adjustment .....164
Emission Control Systems .....165
Oxygenated Fuels.....168

**CONSUMER INFORMATION .....171**
Authorized Manuals.....172
Warranty Coverage .....175
Warranty Service.....176
Contacting Honda .....177
The Honda Rider's Club (USA only) .....178
Your Honda Dealer.....180

**TABLE OF CONTENTS .....182**

**INDEX.....186**

**QUICK REFERENCE**

# Index

## A

accessories .....7
air cleaner .....76
air pressure,
  front suspension .....93
  tires .....119
altering your motorcycle .....8
arrester, spark .....88
Authorized Manuals .....172

## B

brakes,
  fluid level .....109
  lever, front .....17
  lever, front adjustment .....108
  pad wear .....111
  pedal, rear .....18
braking .....37
break-in guidelines .....163
button, engine stop .....17

## C

capacity, fuel .....62
carburetor,
  high altitude adjustment .....164
  idle speed .....85
choke lever .....16
cleaner, air .....76
cleaning, appearance care .....134
clutch system,
  adjustment .....82
  lever .....17
color label .....157
competition inspection .....52
consumer information .....171
controls, operating .....11
coolant .....73
cover removal, side .....58

customer service.....177

## D

damping adjustments .....96, 106
decompressor lever .....18, 32
drive chain.....124

## E

education, rider .....3, 180
emission control systems .....165
engine number.....156
engine,
  flooded .....33
  idle speed.....85
  pinging .....61
  starting.....29
  stop button.....17
  stopping.....34
  won't start .....149
environment, protecting .....145

## F

filter,
  air.....76
  oil.....68
flat tire.....150
flooded engine, starting .....33
fork.....90, 92
front brake lever freeplay .....108
front suspension maintenance.....90
front wheel removal.....114
fuel,
  recommendation.....61
  oxygenated .....169
  tank capacity .....62
  valve .....15

# Index

## G

gap, spark plug .....87
gasohol .....169
gasoline .....61
gears, shifting .....35

## H

headlight .....131
Honda, contacting .....177
Honda service manual .....172

## I

idle speed, engine .....85
inspection,
  competition .....52
  post-ride .....40
  pre-ride .....24

## K

kickstarter .....18

## L

lever,
  clutch .....17
  front brake .....17
  shift .....18
  starter decompressor .....18, 32
limit, weight .....6
loading .....5

## M

maintenance,
component locations .....55
record .....51
safety .....45
schedule.....47
manual, service.....172
modifications .....8

## O

oil,
engine .....64
volume (fork) .....95
operating controls.....11
operation component locations .....12
oxygenated fuels .....169

## P

pad, brake .....111
parking .....39
pedal, rear brake .....18
pinging, engine.....61
plug, spark .....86
post-ride inspection .....40
pre-ride inspection.....24
pre-load, rear suspension .....101

## R

rear suspension maintenance.....91
reserve capacity, fuel tank .....62
rider training.....3, 180

(cont'd)

# Index

riding,
basic operation .....27
before .....21
clothing.....22
precautions .....28
safety .....2
rim lock .....113

## S

schedule, maintenance .....47
seat, removal .....60
service,
customer .....177
warranty .....176
manuals .....172
shifting gears.....35
side cover, removal .....58
side stand.....19, 123
spark arrester .....88
spark knock .....61
spark plug .....86
specifications .....158
spring pre-load, rear suspension .....101
stand, side.....19, 123
starter decompressor lever .....18, 32
starting, engine .....29
stop button, engine .....17
stopping engine .....34
storage .....142
suspension,
front.....90, 92
rear .....91, 99

## T

taillight .....133
throttle
freeplay .....79
operation.....17
tires,
air pressure .....119
flat .....150
replacing.....122
towing.....36
training, rider.....3, 180
transporting .....140
tripmeter .....19
troubleshooting, starting .....149

## U

unexpected problems .....147

## V

valve,
fuel .....15
vehicle identification no. (VIN).....156

## W

warranty,
coverage .....175
extended .....175
service .....176
washing your motorcycle.....135
weight limit .....6
wheels.....113

# Quick Reference

The following is a brief, but important collection of information you need to know about your Honda. You'll also find space to record important notes.

## How To Avoid Costly Repairs

Your Honda engine can be the most expensive component to repair. Proper maintenance, especially the use of the recommended fluids and filters, prevents premature wear and damage.

Frequent causes of costly engine repairs are:

- Engine oil: insufficient quantity, improper oil.
- Air cleaner: dirty, cleaned but not oiled, leaking because of improper installation (poor seal).

Frequent causes of costly chassis repair are:

- Chain: A loosely adjusted chain or a chain stretched because of lack of lubrication may come off and damage an engine case or wheel hub.
- Spokes: Loose spoke may break and damage the wheel hub or rim.

Record important information on the following page:

Record important information here:

| | |
|---|---|
| VIN | |
| Engine No. | |
| Color Label | |
| Owner's: | |
| Name | |
| Address | |
| City/State | |
| Phone | |
| Dealer's: | |
| Name | |
| Address | |
| City/State | |
| Phone | |
| Service Mgr. | |

# Quick Reference

| | |
|---|---|
| Initial Maintenance | about 100 miles (150 km) or 1 month. |
| Regular Maintenance | about every 600 miles (1,000 km) or 6 months. |
| Pre-ride Inspection | Check the following items each time before you ride (page 24 ): tires, spokes & rims, leaks, engine oil, radiator coolant, fuel, drive chain, cables, nuts & bolts, spark plug and cap, throttle, brakes, clutch lever, headlight. |
| Fuel/Capacity | unleaded gasoline, pump octane number of 91 or higher<br>tank: 2.64 US gal (10.0 ℓ)<br>reserve: 0.53 US gal (2.0 ℓ) |
| Engine Oil | API Service Classification SG or higher except oils labeled as energy conserving on the circular API service label, SAE 10W-30, JASO T 903 standard MA,<br>Pro Honda GN4 or HP4 (without molybdenum additives) 4-stroke oil or equivalent |
| Maximum Weight Capacity | 220 lbs (100 kg)<br>rider only (no passenger or cargo) and any accessories |
| Tires | Front: 80/100-21M/C 51M , Rear: 110/100-18M/C 64M<br>Type: bias-ply, tube |
| Tire Pressure (cold) | Front: 15 psi (100 kPa , 1.0 kgf/cm²) , Rear: 15 psi (100 kPa , 1.0 kgf/cm²) |
| Spark Plug | BKR7E-11 (NGK) or K22PR-U11 (DENSO) |
| Coolant | ethylene glycol antifreeze (silicate-free) for aluminum engines in 50/50 solution with Pro Honda HP Coolant or an equivalent distilled water |
| Drive Chain | D.I.D. 520VM or RK 520KZO |