This manual should be considered a permanent part of the motorcycle and should remain with the motorcycle when it is resold.

This publication includes the latest production information available before printing. Honda Motor Co., Ltd. reserves the right to make changes at any time without notice and without incurring any obligation.

No part of this publication may be reproduced without written permission.

© 2003 Honda Motor Co., Ltd.

2004
Honda VT750C
Shadow Aero
OWNER'S MANUAL

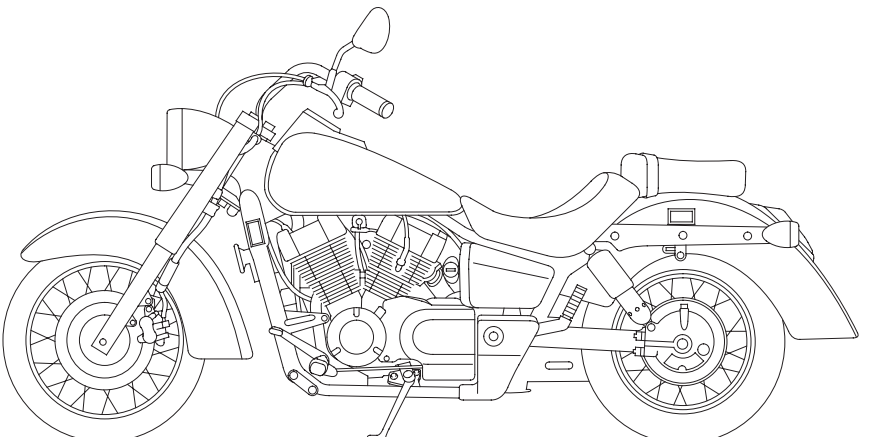

Introduction

Congratulations on choosing your Honda motorcycle.

When you own a Honda, you're part of a worldwide family of satisfied customers — people who appreciate Honda's reputation for building quality into every product.

Before riding, take time to get acquainted with your motorcycle and how it works. To protect your investment, we urge you to take responsibility for keeping your motorcycle well maintained. Scheduled service is a must, of course. But it's just as important to observe the break-in guidelines, and perform all pre-ride and other periodic checks detailed in this manual.

We also recommend that you read this owner's manual before you ride. It's full of facts, instructions, safety information, and helpful tips. To make it easy to use, the manual contains a detailed list of topics at the beginning of each section, and both an in-depth table of contents and an index at the back of the book.

As you read this manual, you will find information that is preceded by a NOTICE symbol. This information is intended to help you avoid damage to your Honda, other property, or the environment.

Read the Warranties Booklet (page 197) thoroughly so you understand the coverages that protect your new Honda and are aware of your rights and responsibilities.

If you have any questions, or if you ever need special service or repairs, remember that your Honda dealer knows your motorcycle best and is dedicated to your complete satisfaction.

Please report any change of address or ownership to your Honda dealer so we will be able to contact you concerning important production information.

You may also want to visit our website at www.honda.com.

Happy riding!

California Proposition 65 Warning

WARNING: This product contains or emits chemicals known to the State of California to cause cancer and birth defects or other reproductive harm.

A Few Words About Safety

Your safety, and the safety of others, is very important. And operating this motorcycle safely is an important responsibility.

To help you make informed decisions about safety, we have provided operating procedures and other information on labels and in this manual. This information alerts you to potential hazards that could hurt you or others.

Of course, it is not practical or possible to warn you about all hazards associated with operating or maintaining a motorcycle. You must use your own good judgment.

You will find important safety information in a variety of forms, including:

- **Safety Labels** — on the motorcycle.
- **Safety Messages** — preceded by a safety alert symbol ⚠ and one of three signal words: **DANGER, WARNING,** or **CAUTION**.

These signal words mean:

Safety Messages

⚠ DANGER **You WILL be KILLED or SERIOUSLY HURT if you don't follow instructions.**

⚠ WARNING **You CAN be KILLED or SERIOUSLY HURT if you don't follow instructions.**

⚠ CAUTION **You CAN be HURT if you don't follow instructions.**

- **Safety Headings** — such as Important Safety Reminders or Important Safety Precautions.
- **Safety Section** — such as Motorcycle Safety.
- **Instructions** — how to use this motorcycle correctly and safely.

This entire manual is filled with important safety information — please read it carefully.

Contents

These pages give an overview of the contents of your owner's manual. The first page of each section lists the topics covered in that section.

Motorcycle Safety..... 1
Important safety information you should know, plus a look at the safety-related labels on your motorcycle.

Instruments & Controls..... 9
The location and function of indicators and controls on your motorcycle and operating instructions for various controls and features.

Before Riding..... 23
The importance of wearing a helmet and other protective gear, how to make sure you and your motorcycle are ready to ride, and important information about loading.

Basic Operation & Riding..... 33
How to start and stop the engine, shift gears, and brake. Also, riding precautions and important information about riding with a passenger or cargo.

Contents

Servicing Your Honda 49
Why your motorcycle needs regular maintenance, what you need to know before servicing your Honda, an owner maintenance schedule, and instructions for specific maintenance and adjustment items.

Tips 137
How to store and transport your motorcycle and how to be an environmentally-responsible rider.

Taking Care of the Unexpected 145
What to do if you have a flat tire, your engine won't start, etc.

Technical Information 173
ID numbers, technical specifications, and other technical facts.

Consumer Information 193
Information on warranties, emission controls, how to get Honda service manuals, and...
"Reporting Safety Defects" 202

Table of Contents 204
Sequential listing of topics in this owner's manual.

Index 208

Quick Reference
Handy facts about fuel, engine oil, tire sizes, and air pressures.

Motorcycle Safety

This section presents some of the most important information and recommendations to help you ride your motorcycle safely. Please take a few moments to read these pages. This section also includes information about the location of safety labels on your motorcycle.

Important Safety Information 2
Accessories & Modifications 5
Safety Labels 7

Important Safety Information

Your motorcycle can provide many years of service and pleasure－if you take responsibility for your own safety and understand the challenges you can meet while riding.

There is much that you can do to protect yourself when you ride. You'll find many helpful recommendations throughout this manual. The following are a few that we consider most important.

Always Wear a Helmet
It's a proven fact: helmets significantly reduce the number and severity of head injuries. So always wear an approved motorcycle helmet and make sure your passenger does the same. We also recommend that you wear eye protection, sturdy boots, gloves, and other protective gear (page 24).

Take Time to Learn & Practice
Even if you have ridden other motorcycles, take time to become familiar with how this motorcycle works and handles. Practice in a safe area until you build your skills and get accustomed to the motorcycle's size and weight.

Because many accidents involve inexperienced or untrained riders, we urge all riders to take a certified course approved by the Motorcycle Safety Foundation (MSF). See page 26 .

Ride Defensively
The most frequent motorcycle collision happens when a car turns left in front of a motorcycle. Another common situation is a car moving suddenly into your lane.

Always pay attention to other vehicles around you, and do not assume that other drivers see you. Be prepared to stop quickly or make an evasive maneuver. For other riding tips, see the booklet, *You and Your Motorcycle: Riding Tips and Practice Guide,* which came with your new motorcycle (USA only).

Make Yourself Easy to See
Some drivers do not see motorcycles because they are not looking for them. To make yourself more visible, wear bright reflective clothing, position yourself so other drivers can see you, signal before turning or changing lanes, and use your horn when it will help others notice you.

Ride within Your Limits
Pushing limits is another major cause of motorcycle accidents. Never ride beyond your personal abilities or faster than conditions warrant. Remember that alcohol, drugs, fatigue, and inattention can significantly reduce your ability to make good judgments and ride safely.

Don't Drink and Ride
Alcohol and riding don't mix. Even one drink can reduce your ability to respond to changing conditions, and your reaction time gets worse with every additional drink. So don't drink and ride, and don't let your friends drink and ride either.

Keep Your Honda in Safe Condition
It's important to keep your motorcycle properly maintained and in safe riding condition. To help avoid problems, inspect your motorcycle before every ride and perform all recommended maintenance. Never exceed load limits (page 31), and do not modify your motorcycle (page 6) or install accessories that would make your motorcycle unsafe (page 5).

Modifying your motorcycle or using non-Honda accessories can make your motorcycle unsafe. Before you consider making any modifications or adding an accessory, be sure to read the following information.

⚠ WARNING

Improper accessories or modifications can cause a crash in which you can be seriously hurt or killed.

Follow all instructions in this owner's manual regarding accessories and modifications.

Accessories

We strongly recommend that you use only genuine Honda accessories that have been specifically designed and tested for your motorcycle. Because Honda cannot test all other accessories, you must be personally responsible for proper selection, installation, and use of non-Honda accessories.
Check with your Honda dealer for assistance and always follow these guidelines:

- Make sure the accessory does not obscure any lights, reduce ground clearance and lean angle, limit suspension travel or steering travel, alter your riding position, or interfere with operating any controls.

- Do not install any fairing or windshield unless it was designed and tested by Honda for your motorcycle. Some fairings or windshields, even smaller ones, can cause unstable handling of your motorcycle. This is especially true if the fairing or windshield is poorly designed or improperly mounted.
- Do not add any electrical equipment that will exceed the motorcycle's electrical system capacity (page 181). A blown fuse can cause a loss of lights or engine power (page 165).
- Do not pull a trailer or sidecar with your motorcycle. This motorcycle was not designed for these attachments, and their use can seriously impair your motorcycle's handling.

Modifications

We strongly advise you not to remove any original equipment or modify your motorcycle in any way that would change its design or operation. Such changes could seriously impair your motorcycle's handling, stability, and braking, making it unsafe to ride.

Removing or modifying your lights, exhaust system, emission control system, or other equipment can also make your motorcycle illegal.

Safety labels on your motorcycle either warn you of potential hazards that could cause serious injury or they provide important safety information. Read these labels carefully and don't remove them.

If a label comes off or becomes hard to read, contact your Honda dealer for a replacement.

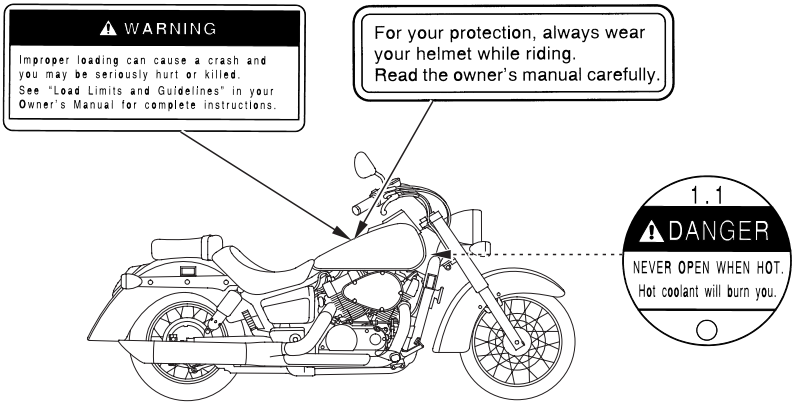

Safety Labels

〈 For USA 〉

TIRE INFORMATION

Cold tire pressures :
[Up to maximum weight capacity]
Front 200kPa 2.00kgf/cm² 29psi
Rear 250kPa 2.50kgf/cm² 36psi
[Up to 90kg(200lbs) load]
Front 200kPa 2.00kgf/cm² 29psi
Rear 200kPa 2.00kgf/cm² 29psi
Maximum weight capacity : 182kg(401lbs)
Tire size : Front 120/90-17M/C 64S
Rear 160/80-15M/C 74S

Tire brand	Front	Rear
DUNLOP	D404FG	D404
BRIDGESTONE	G701	G702
CHENG SHIN	M6002	M6011R

Min. recommend tire center tread depth:
Front 1.5mm (0.06in.) Rear 2.0mm (0.08in.)

Read owner's manual.

〈 For Canada 〉

TIRE INFORMATION

Cold tire pressures :
[Up to maximum weight capacity]
Front 200kPa 2.00kgf/cm² 29psi
Rear 250kPa 2.50kgf/cm² 36psi
[Up to 90kg(200lbs) load]
Front 200kPa 2.00kgf/cm² 29psi
Rear 200kPa 2.00kgf/cm² 29psi
Maximum weight capacity : 186kg(410lbs)
Tire size : Front 120/90-17M/C 64S
Rear 160/80-15M/C 74S

Tire brand	Front	Rear
DUNLOP	D404FG	D404
BRIDGESTONE	G701	G702
CHENG SHIN	M6002	M6011R

Min. recommend tire center tread depth:
Front 1.5mm (0.06in.) Rear 2.0mm (0.08in.)

Read owner's manual.

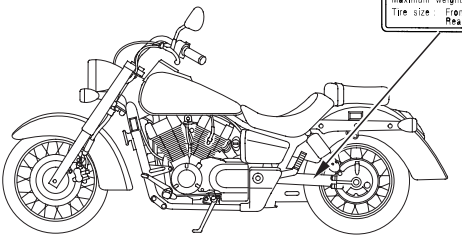

Instruments & Controls

This section shows the location of all gauges, indicators, and controls you would normally use before or while riding your motorcycle.

The items listed on this page are described in this section. Instructions for other components are presented in other sections of this manual where they will be most useful.

Component Locations 10
Indicators 13
Controls & Features
- Fuel Valve..... 17
- Choke Knob..... 18
- Ignition Switch 18
- Start Button..... 19
- Engine Stop Switch 20
- Headlight Dimmer Switch 20
- Turn Signal Switch..... 21
- Horn Button 21
- Odometer/Tripmeter Select and Reset Button 21

Component Locations

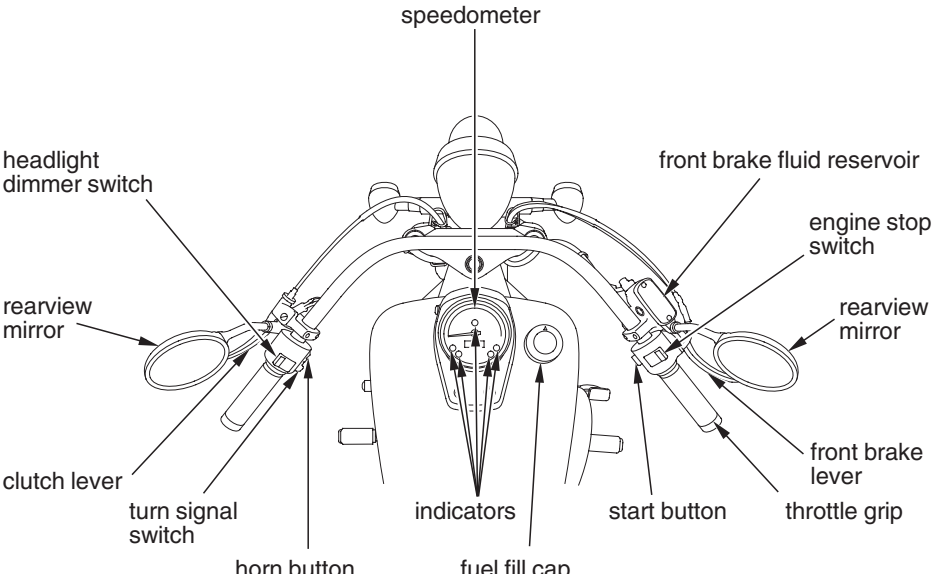

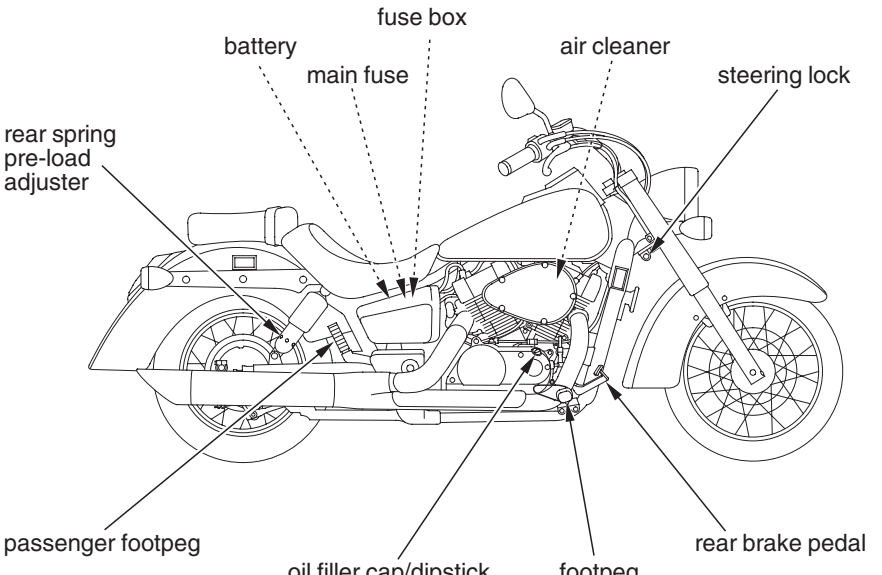
fuse box
battery
air cleaner
main fuse
steering lock
rear spring
pre-load
adjuster
passenger footpeg
oil filler cap/dipstick
footpeg
rear brake pedal

Component Locations

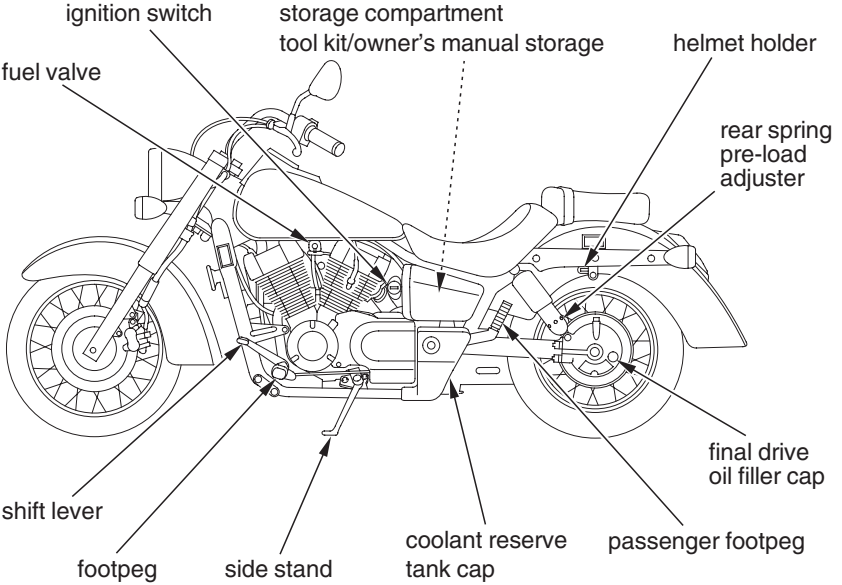

The indicators on your motorcycle keep you informed, alert you to possible problems, and make your riding safer and more enjoyable. Refer to the indicators frequently. Their functions are described on the following pages.

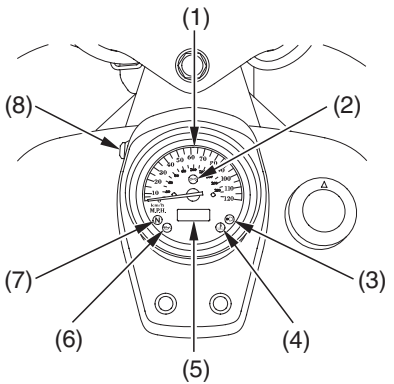

(1) speedometer
(2) turn signal indicator
(3) high beam indicator
(4) coolant temperature indicator
(5) odometer/tripmeter display
(6) low oil pressure indicator
(7) neutral indicator
(8) odometer/tripmeter select and reset

USA: Odometer & tripmeter read in miles.

Canada: Odometer & tripmeter read in kilometers.

(cont'd)

Indicators

Lamp Check

The low oil pressure indicator comes on when you turn the ignition switch ON so you can check that it is working. The indicator remains on until after the engine is started. The low oil pressure indicator is identified in the table on page 16 with the words: *Lamp Check*.

When applicable, the high beam and neutral indicators come on when you turn the ignition switch ON and remain on until you select the low beam or shift out of neutral.

If one of these indicators does not come on when it should, have your Honda dealer check for problems.

1	speedometer	Shows riding speed in miles (USA) or kilometers (Canada) per hour.
2	turn signal indicator (amber)	Flashes when either turn signal operates.
3	high beam indicator (blue)	Lights when the headlight is on high beam.
4	coolant temperature indicator (red)	Lights when the coolant is over the specified temperature. If the indicator comes on, pull safely to the side of the road. See page 162 for instructions and cautions.

5	odometer/tripmeter display		
		odometer	Shows the total miles (USA) or kilometers (Canada) ridden.
		tripmeter 1 & 2	Shows the number of miles (USA) or kilometers (Canada) ridden since you last reset the meter. The tripmeter has two sub modes, ‘‘TRIP 1’’ and ‘‘TRIP 2.’’ To zero (0) the tripmeter, press the tripmeter reset button.
6	low oil pressure indicator (red)		Lights when engine oil pressure is low enough to cause engine damage. If the indicator lights, pull safely to the side of the road. See page 164 for instructions and cautions. *Lamp Check*.
7	neutral indicator (green)		Lights when the transmission is in neutral.
8	odometer/tripmeter select and reset button		Resets the tripmeter or selects the operation mode: tripmeter or odometer (page 22).

Fuel Valve

LEFT SIDE

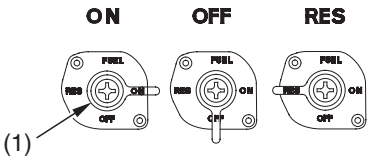

(1) fuel valve

The manual fuel valve is located on the left side under the fuel tank.

The three-way fuel valve is used to control the flow of fuel from the fuel tank to the carburetors.

ON－normal position for riding.

OFF－for parking, storing, or transportation.
RES－for extra fuel to get to a gas station for refueling.

Automatic Fuel ON-OFF
With the fuel valve set to ON (or RES), fuel flows to the carburetors only when the engine is being started or is running. A diaphragm shuts off fuel flow when the engine is turned off.

Reserve Fuel
Remember to check that the fuel valve is in the ON position each time you refuel. If the valve is left in the RES position, you may run out of fuel with no reserve.

For complete information about fueling your motorcycle, see page 74 .

Choke Knob

LEFT SIDE

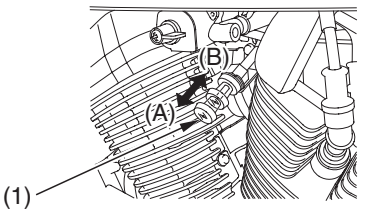

(1) choke knob (A) fully ON
(B) fully OFF

The choke knob may be used when starting the engine. See page 36 .

Ignition Switch

The ignition switch is used for starting and stopping the engine (page 35). The ignition key is also used to lock the steering for theft prevention (page 44). Insert the key and turn it to the right for the ON position.

Key Position	Function
ON	Electrical circuits on.
OFF	No electrical circuits function.

LEFT SIDE

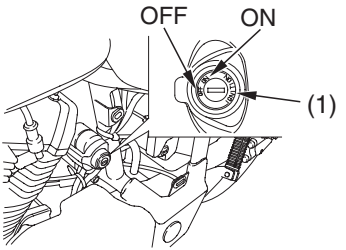

(1) ignition switch

If a key ring is used, we recommend a fabric or leather type with just the key attached. The use of a metal key ring or the attachment of additional keys to any type of key ring may damage the finish of the side cover and engine cover while inserting the key or riding.

Start Button

The start button (1) is used for starting the engine. Pushing the button in starts the engine. See *Starting Procedure,* page 36 .

When the start button is pushed, the starter motor will crank the engine; the headlight will automatically go out, but the taillight will stay on.

The starter motor will not operate if the engine stop switch is in the OFF position when the start button is pushed.

(cont'd)

Engine Stop Switch

RIGHT HANDLEBAR

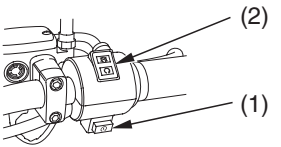

(1) start button
(2) engine stop switch

OFF
RUN

The engine stop switch (2) is used to stop the engine in an emergency. To operate, push the switch to the OFF position. The switch must be in the RUN position to start the engine, and it should normally remain in the RUN position even when the engine is OFF.

If your motorcycle is stopped with the ignition switch ON and the engine stop switch OFF, the headlight and taillight will remain on, resulting in battery discharge.

Headlight Dimmer Switch

The headlight dimmer switch (1) is used to change between the high and low beams of the headlight. To operate, turn the switch to HI for high beam, LO for low beam.

Turn Signal Switch

The turn signal switch (2) is used to signal a turn or a lane change. To operate, move the switch all the way in the proper direction and release it. The appropriate turn signal lights will start blinking. To cancel the light, push the switch in.

LEFT HANDLEBAR

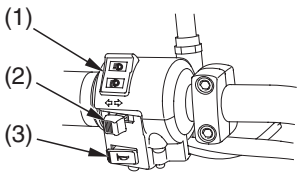

(1) headlight dimmer switch HI
(2) turn signal switch LO
(3) horn button

Horn Button

The horn is used to alert other motorists. To operate, push the horn button (3).

Odometer/Tripmeter Select and Reset Button

The display (1) has two functions, odometer and tripmeter.
The tripmeter will show mileage in two sub modes, ‘‘TRIP 1’’ and ‘‘TRIP 2.’’

Push the button (2) to select the ‘‘ODO’’, ‘‘TRIP 1’’ or ‘‘TRIP 2’’ mode.

To reset the tripmeter, push and hold the button with the display in the ‘‘TRIP 1’’ or ‘‘TRIP 2’’ mode. (cont’d)

FRONT

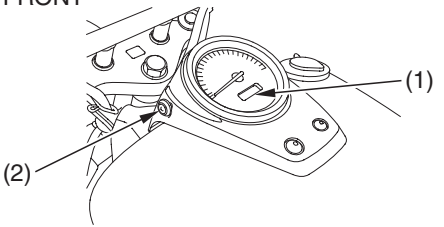

(1) odometer/tripmeter display
(2) odometer/tripmeter
select and reset button

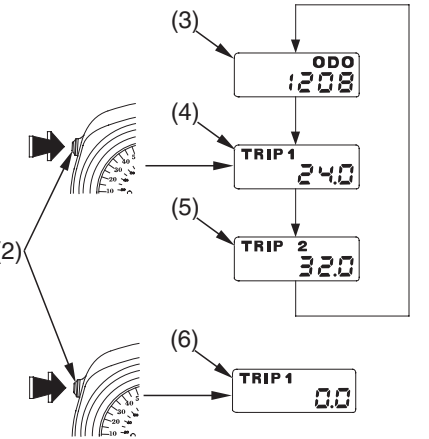

(3) odometer
(4) tripmeter 1
(5) tripmeter 2
(6) tripmeter reset

Before Riding

Before each ride, you need to make sure you and your Honda are both ready to ride. To help get you prepared, this section discusses how to evaluate your riding readiness, what items you should check on your motorcycle, and adjustments to make for your comfort, convenience, or safety. This section also includes important information about loading.

For information about adjusting the suspension on your Honda, see page 107.

Are You Ready to Ride ? 24
Protective Apparel 24
Rider Training 26
Is Your Motorcycle Ready to Ride ? 27
Pre-ride Inspection 27
Load Limits & Guidelines..... 30
Loading 30
Load Limits 31
Loading Guidelines 31

Are You Ready to Ride?

Before you ride your motorcycle for the first time, we urge you to:

- Read this owner's manual.
- Make sure you understand all the safety messages.
- Know how to operate all the controls.

Before each ride, be sure:

- You feel well and are in good physical and mental condition.
- You are wearing an approved motorcycle helmet (with chin strap tightened securely), eye protection, and other protective clothing.
- You don't have any alcohol or drugs in your system.

Make sure your passenger is ready to ride, too, and is wearing proper gear including a helmet.

If you must carry an extra helmet while riding, use a commercially-available elastic cord, strap, or net to secure the helmet to the seat.

Protective Apparel

For your safety, we strongly recommend that you always wear an approved motorcycle helmet, eye protection, boots, gloves, long pants, and a long-sleeved shirt or jacket whenever you ride. Although complete protection is not possible, wearing proper gear can reduce the chance of injury when you ride. Following are suggestions to help you choose the proper gear.

Helmets and Eye Protection

Your helmet is your most important piece of riding gear because it offers the best protection against head injuries. A helmet should fit your head comfortably and securely. A bright-colored helmet and reflective strips can make you more noticeable in traffic.

An open-face helmet offers some protection, but a full-face helmet offers more. Regardless of the style, look for a DOT (Department of Transportation) sticker in any helmet you buy (USA only). Always wear a face shield or goggles to protect your eyes and help your vision.

⚠ WARNING

Not wearing a helmet increases the chance of serious injury or death in a crash.

Be sure you and your passenger always wear a helmet, eye protection, and other protective apparel when you ride.

Additional Riding Gear

In addition to a helmet and eye protection, we also recommend:

- Sturdy boots with non-slip soles to help protect your feet and ankles.
- Leather gloves to help protect your hands.

(cont'd)

- A motorcycle riding suit or jacket for comfort as well as protection. Bright-colored and reflective clothing can help make you more noticeable in traffic. Avoid loose clothes that could get caught on any part of your motorcycle.

Rider Training

Developing your riding skills is an on-going process. Even if you have ridden other motorcycles, take time to become familiar with how this motorcycle works and handles. Practice riding the motorcycle in a safe area to build your skills. Do not ride in traffic until you get accustomed to the motorcycle's controls, and feel comfortable with its size and weight.

We urge all riders to take a certified course approved by the Motorcycle Safety Foundation (MSF). New riders should start with the basic course, and even experienced riders will find the advanced course beneficial. For information about the MSF training course nearest you, call the national toll-free number: (800) 446-9227.

Other riding tips can be found in the *Riding Tips* booklet that came with your motorcycle (USA only).

Before each ride, it's important to inspect your motorcycle and make sure any problem you find is corrected. A pre-ride inspection is a must, not only for safety, but because having a breakdown, or even a flat tire, can be a major inconvenience.

⚠ WARNING

Improperly maintaining this motorcycle or failing to correct a problem before riding can cause a crash in which you can be seriously hurt or killed.

Always perform a pre-ride inspection before every ride and correct any problems.

Pre-ride Inspection

Check the following items before you get on the motorcycle:

Tires Look at the tires. If a tire appears low, use an air pressure gauge to check its pressure. Also look for signs of excessive wear (page 119) or damage to the tires, rims, or spokes.

(cont'd)

Is Your Motorcycle Ready to Ride?

Leaks, Loose Parts	Walk around your motorcycle and look for anything that appears unusual, such as a leak or loose cable.
Lights	Make sure the headlight, brake light, taillight, and turn signals are working properly.

If you are carrying a passenger or cargo, also check the following:

Load Limits	Make sure you do not exceed the load limits (page 31).
Cargo	Check that all cargo is secure.
Adjustments	Adjust the rear suspension (page 108) according to your load.

Is Your Motorcycle Ready to Ride?

Check these items after you get on the motorcycle:

Throttle Rotate the throttle to check it moves smoothly without binding.

Brakes Pull the brake lever and press on the brake pedal to check that they operate normally.

Indicators Turn the ignition on and check for normal operation of the indicators (page 13).

If you haven't ridden the motorcycle in over a week, you should also check other items, such as the oil level and other fluids. See *Periodic Maintenance* (page 56). Periodic maintenance should also be done at least once a month, no matter how often you ride.

Remember, be sure to take care of any problem you find, or have your Honda dealer correct it before you ride.

Load Limits & Guidelines

Your motorcycle has been designed to carry you and one passenger. When you carry a passenger, you may feel some difference during acceleration and braking. But so long as you keep your motorcycle well-maintained, with good tires and brakes, you can safely carry loads within the given limits and guidelines.

However, exceeding the weight limit or carrying an unbalanced load can seriously impair your motorcycle's handling, braking, and stability. Non-Honda accessories, improper modifications, and poor maintenance can also reduce your safety margin.

Loading

How much weight you put on your motorcycle, and how you load it, are important to your safety. Anytime you ride with a passenger or cargo, you should be aware of the following information.

⚠ WARNING

Overloading or improper loading can cause a crash and you can be seriously hurt or killed.

Follow all load limits and other loading guidelines in this manual.

Load Limits

Following are the load limits for your motorcycle:

maximum weight capacity:
401 lbs (182 kg)
410 lbs (186 kg) (Canada only)
includes the weight of the rider, passenger, all cargo, and all accessories.

maximum cargo weight:
40 lbs (18 kg)

The weight of added accessories will reduce the maximum cargo weight you can carry.

Loading Guidelines

Your motorcycle is primarily intended for transporting you and a passenger. You may wish to secure a jacket or other small items to the seat when you are not riding with a passenger.

If you wish to carry more cargo, check with your Honda dealer for advice, and be sure to read the information regarding accessories on page 5 .

(cont'd)

Load Limits & Guidelines

Improperly loading your motorcycle can affect its stability and handling. Even if your motorcycle is properly loaded, you should ride at reduced speeds and never exceed 80 mph (130 km/h) when carrying cargo.

Follow these guidelines whenever you carry a passenger or cargo:

- Check that both tires are properly inflated, and that pressure in the rear tire is increased to suit the load (page 117).
- If you change your normal load, you may need to adjust the rear suspension (page 108).
- To prevent loose items from creating a hazard, make sure that all cargo is tied down securely before you ride.
- Place cargo weight as low and close to the center of your motorcycle as possible.
- Balance cargo weight evenly on both sides.
- Do not attach large or heavy items (such as a sleeping bag or tent) to the handlebar, forks, or fender.

Basic Operation & Riding

This section gives basic riding instructions, including how to start and stop your engine, and how to use the throttle, clutch, and brakes. It also provides important information on riding with a passenger or cargo.

To protect your new engine and enjoy optimum performance and service life, refer to Break-in Guidelines (page 184).

For information about carburetor adjustment and other parts replacement for riding at high altitude, see page 185 .

Safe Riding Precautions 34
Starting & Stopping the Engine 35
Preparation..... 35
Starting Procedure 36
Flooded Engine..... 38
How to Stop the Engine 39
Shifting Gears..... 40
Braking 42
Parking..... 44
Riding with a Passenger or Cargo..... 47

Safe Riding Precautions

Before riding your motorcycle for the first time, please review the *Motorcycle Safety* section beginning on page 1, and the *Before Riding* section beginning on page 23 .

Even if you have ridden other motorcycles, take time to become familiar with how this motorcycle works and handles. Practice in a safe area until you build your skills and get accustomed to the motorcycle's size and weight.

Always follow the proper starting procedure described below.

For your safety, avoid starting or operating the engine in an enclosed area such as a garage. Your motorcycle's exhaust contains poisonous carbon monoxide gas which can collect rapidly in an enclosed area and cause illness or death.

Your motorcycle can be started with the transmission in gear by pulling in the clutch lever before operating the starter.

Your motorcycle is equipped with a side stand ignition cut-off system. If the side stand is down—the engine cannot be started unless the transmission is in neutral. If the side stand is up—the engine can be started in neutral, or in gear with the clutch lever pulled in. After starting with the side stand down, the engine will stop if the transmission is put in gear before raising the side stand.

Preparation

Before starting, insert the key, turn the ignition switch ON, and confirm the following:

- The transmission is in NEUTRAL (neutral indicator light ON).
- The engine stop switch is set to RUN.
- The low oil pressure indicator is ON.
- The fuel valve is ON.

(cont'd)

The low oil pressure indicator should go off a few seconds after the engine starts. If the indicator stays on, stop the engine immediately and check the engine oil level.

Starting Procedure

To restart a warm engine, follow the procedure for *High Air Temperature.*

Normal Air Temperature
10° – 35°C (50° – 95°F)

LEFT SIDE

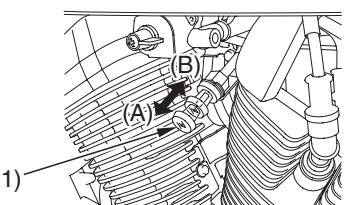

(1) choke knob (A) fully ON
(B) fully OFF

1. Pull the choke knob out all the way to fully ON (A), if the engine is cold.
2. With the throttle closed, press the start button.

Do not open the throttle when starting the engine with the choke on. This will lean the mixture, resulting in hard starting.

3. Immediately after the engine starts, operate the choke knob to keep fast idle.
4. About a half minute after the engine starts, push the choke knob (1) in all the way to fully OFF (B).
5. If idling is unstable, open the throttle slightly.

High Air Temperature
35°C (95°F) or above

1. Do not use the choke.
2. With the throttle slightly open, press the start button.

Low Air Temperature
10°C (50°F) or below

1. Follow steps 1-2 under *Normal Air Temperature*.
2. When engine rpm begins to pick up, operate the choke knob to keep fast idle.

(cont'd)

3. Continue warming up the engine until it runs smoothly and responds to the throttle when the choke knob is at fully OFF (B).

NOTICE

Extended use of the choke may impair piston and cylinder wall lubrication and damage the engine.

Snapping the throttle or fast idling for more than about 5 minutes at normal air temperature may cause exhaust pipe discoloration.

Flooded Engine

If the engine fails to start after repeated attempts, it may be flooded with excess fuel. To clear a flooded engine:

1. Leave the engine stop switch set to RUN.
2. Push the choke knob in all the way to fully OFF.
3. Open the throttle fully.
4. Press the start button for 5 seconds.

5. If the engine starts, quickly close the throttle, then open it slightly if idling is unstable.
   If the engine does not start, wait 10 seconds, then follow the *High Air Temperature* procedure (page 37).

If the engine still won't start, refer to *If Your Engine Quits or Won't Start,* page 147 .

How to Stop the Engine

Normal Engine Stop
To stop the engine, shift into neutral and turn the ignition switch OFF.

The engine stop switch should normally remain in the RUN position even when the engine is OFF.

If your motorcycle is stopped with the engine stop switch OFF and the ignition switch ON, the headlight and taillight will remain on, resulting in battery discharge.

Emergency Engine Stop
To stop the engine in an emergency, use the engine stop switch. To operate, press the switch to the OFF position.

Shifting Gears

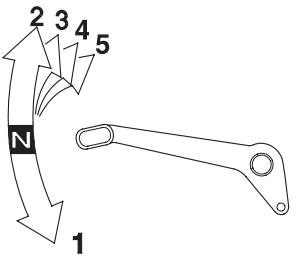

shifting pattern

Your motorcycle has five forward gears in a one-down, four-up shift pattern which is coordinated with a cable-operated clutch system.

Learning when to shift gears comes with experience. Keep the following tips in mind:

- As a general rule, shift while moving in a straight line.
- Close the throttle and pull the clutch lever in completely before shifting. Improper shifting may damage the engine, transmission, and drive train.
- Learn to recognize the engagement point as you release the clutch lever. It is at this point the transmission of power to the rear wheel resumes.
- Upshift to a higher gear or reduce throttle before engine rpm (speed) gets too high. Learn the relationship between engine sound and the normal shifting points.
- Downshift to a lower gear before you feel the engine laboring (lugging) at low rpm.

- Avoid downshifting to help slow your motorcycle when engine rpm is high. Downshifting when engine speed is near its allowable maximum may over-rev the engine and cause possible damage.
- To prevent transmission damage, do not coast or tow the motorcycle for long distances with the engine off.

Recommended Shift Points

Ride in the highest gear that lets the engine run and accelerate smoothly. This will give you good fuel economy and effective emissions control. When changing gears under normal conditions, use these recommended shift points:

Shifting Up:

From 1st to 2nd:	12 mph (20 km/h)
From 2nd to 3rd:	19 mph (30 km/h)
From 3rd to 4th:	25 mph (40 km/h)
From 4th to 5th:	31 mph (50 km/h)

Shifting Down:

From 5th to 4th:	28 mph (45 km/h)
From 4th to 3rd:	22 mph (35 km/h)
From 3rd to 2nd:	16 mph (25 km/h)

Pull the clutch lever in when speed drops below 9 mph (15 km/h), when engine roughness is evident, or when engine stalling is imminent; and shift down to 1st gear for acceleration.

Braking

Your motorcycle is equipped with a hydraulically-activated disc brake in front and a mechanically-activated drum brake at the rear. Operating the brake lever applies the front disc brake. Depressing the brake pedal applies the rear drum brake.
As a general rule, the front braking system provides about 70 percent of total stopping power.

For full braking effectiveness, use both the pedal and lever simultaneously. Using both braking systems will stop your motorcycle faster with greater stability.

To slow or stop, apply the brake lever and brake pedal smoothly, while downshifting to match your speed.

Gradually increase braking as you feel the brakes slowing your speed. The increase in engine compression from downshifting will help slow your motorcycle.

To prevent stalling the engine, pull the clutch lever in before coming to a complete stop. For support, put your left foot down first, then your right foot when you are through using the brake pedal.

Applying the brakes too hard may cause the wheels to lock and slide, reducing control of your motorcycle. If this happens, release the brake controls, steer straight ahead until you regain control, then reapply the brakes more gently.

When possible, reduce your speed or complete braking before entering a turn. Avoid braking or closing the throttle quickly while turning. Either action may cause one or both wheels to slip and reduce your control of your motorcycle.

Your ability to brake in a turn and to brake hard in an emergency situation are important riding skills. We suggest attending a Motorcycle Safety Foundation experienced rider training course (page 26) to retain these skills.

When descending a long, steep grade, use engine compression braking by downshifting, with intermittent use of both brakes. Continuous brake application can overheat the brakes and reduce their effectiveness.

Riding with your foot resting on the brake pedal or your hand on the brake lever may actuate the brakelight, giving a false indication to other drivers. It may also overheat the brakes, reducing effectiveness.

Parking

1. Look for a level parking area. If you can't park on a paved surface, make sure the ground surface is firm, especially under the side stand.
   If you must park on a hill, leave the transmission in gear and position the rear tire against the curb at a 45 degree angle.
2. Use the side stand to support the motorcycle while parked.
   - To lower the side stand, use your foot to guide it down. Remember that lowering the side stand with the transmission in gear will stop the engine, even if the clutch lever is pulled in. That is a function of the side stand ignition cut-off system.
   - Check that the side stand is down all the way so that the side stand ignition cut-off system (page 35) is activated.
   - If you have to park on a soft surface, insert something solid under the side stand for support.
3. Use the steering lock (1), which locks the handlebar in place. Turn the handlebar all the way to the left. Insert the ignition key (2) in the lock and turn it 180 degrees clockwise. Remove the key.

RIGHT FRONT

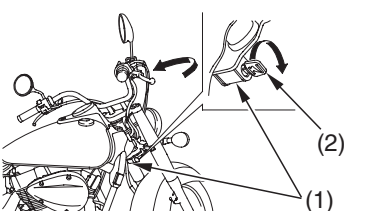

(1) steering lock (2) ignition key

4. Use the helmet holder (3) to secure your helmet with your motorcycle:
   - Insert the ignition key (2) and turn it counterclockwise to unlock the holder.
   - Hang your helmet on the holder pin (4).
   - Push in on the holder pin. Remove the key.

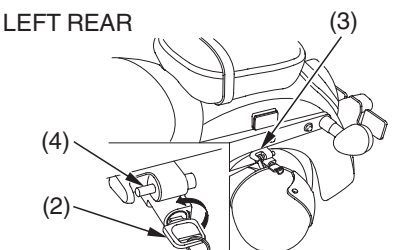

(2) ignition key (4) holder pin
(3) helmet holder

⚠ WARNING

Riding with a helmet attached to the holder can interfere with the rear wheel or suspension and could cause a crash in which you can be seriously hurt or killed.

Use the helmet holder only while parked. Do not ride with a helmet secured by the holder.

5. Turn the fuel valve OFF.

Parking

Theft-Prevention Tips

- Park your motorcycle in a locked garage whenever possible. If a garage isn't available, park in a concealed area or in a well-lit area with enough pedestrian traffic to discourage a thief.
- Always take the ignition key with you.
- Always use the steering lock (page 44), even if you're parking for just a minute or two. A thief can easily push an unlocked motorcycle to a waiting truck.
- In addition to the steering lock, use a good quality anti-theft device made specifically to lock a motorcycle to a secure object.
- If you decide to use an anti-theft device, select one of good quality and be sure to follow the manufacturer's instructions.
- Keep your owner's manual, current registration, and insurance information with your motorcycle. This will make it easier for the authorities to find you if your motorcycle is stolen and recovered.

Riding with a Passenger or Cargo

Your motorcycle is designed to carry you and one passenger. Whenever you add a passenger or cargo, you must be careful not to exceed the total load limits for this vehicle (*Load Limits,* page 31). Make sure your cargo is properly secured (*Loading Guidelines,* page 31).

Also consider adjusting the suspension (page 107) for the extra load.

Be aware that carrying a passenger or heavy cargo can affect acceleration, braking, and handling.

Before riding with a passenger, make sure your passenger is wearing the proper protective apparel (page 24).

Tell your passenger to hold the seat strap or your waist, lean with you in the turns, and keep their feet on the passenger footpegs at all times, even when the motorcycle is stopped at a traffic light.

Servicing Your Honda

To help keep your motorcycle in good shape, this section includes a Maintenance Schedule for required service, a list of periodic checks you should perform at least once a month, and step-by-step instructions for specific maintenance tasks. You'll also find important safety precautions, information on fuels and oils, and tips for keeping your Honda looking great.

For information about the exhaust emission and noise emission requirements of the U.S. Environmental Protection Agency (EPA) and the California Air Resources Board (CARB), see page 186 .

For information about replacing fuses, see page 165 .

USA only
Maintenance, replacement or repair of the emission control devices and systems may be performed by any motorcycle repair establishment or individual using parts that are ''certified'' to EPA standards.

Before You Service Your Honda

The Importance of Maintenance 52
Maintenance Safety 53
Important Safety Precautions 54
Periodic Maintenance 56
Maintenance Schedule 58
Maintenance Record 63

(cont'd)

Servicing Your Honda

Service Preparations
Component Locations 65
Tool Kit..... 68
Owner's Manual Storage..... 69
Storage Compartment..... 70
Side Cover Removal..... 71
Seat Removal..... 72

Service Procedures
Fluids & Filters
Fuel 73
Engine Oil & Filter..... 76
Coolant..... 86
Air Cleaner 90
Crankcase Breather..... 92
Final Drive Oil..... 93

Engine
Throttle 96
Clutch System..... 98
Engine Idle Speed..... 102
Spark Plugs 104

Chassis
Suspension 107
Brakes 110
Tires 117
Side Stand 124

Electrical
Battery..... 125

Appearance Care 130

The following table summarizes the three types of inspections and servicing recommendations for your motorcycle. Both the pre-ride inspection and the scheduled maintenance at the recommended intervals are necessary to assure safe and dependable performance. The periodic checks provide additional confidence in your motorcycle's performance.

Type of Inspection/Service	Refer to page:	When Performed	Who Performs
Pre-ride Inspection	27	before every ride	you
Periodic Maintenance	56	monthly*	you
Maintenance Schedule	58	interval on schedule	your Honda dealer**

* more often if you ride frequently or long distances; or anytime you clean your motorcycle
**unless you have the proper tools and service data and are mechanically qualified

The Importance of Maintenance

Keeping your motorcycle well-maintained is absolutely essential to your safety. It's also a good way to protect your investment, get maximum performance, avoid breakdowns, and have more fun. A properly maintained motorcycle will also help to reduce air pollution.

Remember, proper maintenance is the owner's responsibility. Be sure to inspect your motorcycle before each ride, perform the periodic checks, and follow the Maintenance Schedule in this section.

⚠ WARNING

Improperly maintaining this motorcycle or failing to correct a problem before you ride can cause a crash in which you can be seriously hurt or killed.

Always follow the inspection and maintenance recommendations and schedules in this owner's manual.

If your motorcycle overturns or is involved in a crash, be sure your Honda dealer inspects all major parts, even if you are able to make some repairs.

Maintenance Safety

This section includes instructions on how to perform some important maintenance tasks. If you have basic mechanical skills, you can perform many of these tasks with the tools provided with your motorcycle.

Other tasks that are more difficult and require special tools are best performed by professionals. Wheel removal should normally be handled only by a Honda technician or other qualified mechanic. Instructions are included in this manual only to assist in emergency service.

Some of the most important safety precautions follow. However, we cannot warn you of every conceivable hazard that can arise in performing maintenance. Only you can decide whether or not you should perform a given task.

⚠ WARNING

Failure to properly follow maintenance instructions and precautions can cause you to be seriously hurt or killed.

Always follow the procedures and precautions in this owner's manual.

Maintenance Safety

Important Safety Precautions

- Make sure the engine is off before you begin any maintenance or repairs. This will help eliminate several potential hazards:
  Carbon monoxide poisoning from engine exhaust. Be sure there is adequate ventilation whenever you operate the engine.
  Burns from hot motorcycle parts. Let the engine and exhaust system cool before touching.
  Injury from moving parts. Do not run the engine unless instructed to do so.
- Read the instructions before you begin, and make sure you have the tools and skills required.
- To help prevent the motorcycle from falling over, park it on a firm, level surface, using the side stand or a maintenance stand to provide support.
- To reduce the possibility of a fire or explosion, be careful when working around gasoline. Use only non-flammable solvent, not gasoline, to clean parts. Keep cigarettes, sparks, and flames away from all fuel-related parts.

Remember that your Honda dealer knows your motorcycle best and is fully equipped to maintain and repair it. To ensure the best quality and reliability, use only new genuine Honda parts or their equivalents for repair and replacement. If you have the tools and skills required for additional maintenance jobs, you can purchase an official Honda Service Manual (page 194).

Periodic Maintenance

In addition to the regularly scheduled maintenance (page 58) and daily pre-ride inspection (page 27), consider performing the periodic checks on the following page at least once a month, even if you haven't ridden your motorcycle, or as often as once a week if you ride frequently or for long distances. It's a good idea to perform this maintenance any time you clean your motorcycle.

Check the odometer reading and perform any scheduled maintenance checks that are needed (page 58). Remember, more frequent checks may be needed for riding in severe conditions.

Tires	Check the air pressure with a gauge and add air if needed (page 117). Examine the tread for wear (page 119). Look closely for nails, embedded objects, cuts, and other types of damage (page 119). Roll your motorcycle so you can inspect the entire surface. Check the condition of the rims and spokes.
Fluids	Check the levels of the engine oil (page 80), coolant (page 87), brake fluid (page 111), and final drive oil (page 93). Add the correct fluid as necessary, and investigate the cause of any low fluid level.
Lights	Make sure the headlight, brake light, taillight, and turn signals are working properly.
Freeplay	Check the freeplay of the clutch lever (page 98), rear brake pedal (page 114), and throttle grip (page 96).
Fuses	Make sure you have a full supply of spare fuses.
Nuts & Bolts	Check the major fasteners and tighten as needed.

Maintenance Schedule

The required Maintenance Schedule that follows specifies how often you should have your motorcycle serviced, and what things need attention. It is essential to have your motorcycle serviced as scheduled to maintain safe, dependable performance and proper emission control.

The service intervals in this Maintenance Schedule are based on average riding conditions. Some items will need more frequent service if you ride in unusually wet or dusty areas or at full throttle. Consult your Honda dealer for recommendations applicable to your individual needs and use.

Some items in the Maintenance Schedule can be performed with basic mechanical skills and hand tools. Procedures for these items are provided in this manual. Other items involve more extensive procedures and may require special training, tools, and equipment. We recommend that you have your Honda dealer perform these tasks unless you have advanced mechanical skills and the required tools and equipment. Procedures for such items in this schedule are provided in an official Honda Service Manual available for purchase (page 194).

If you do not feel capable of performing a given task or need assistance, remember that your Honda dealer knows your motorcycle best and is fully equipped to maintain and repair it. If you decide to do your own maintenance, use only genuine Honda parts or their equivalents for repair or replacement to ensure the best quality and reliability.

Perform the pre-ride inspection (page 27) and owner maintenance (page 58) at each scheduled maintenance period.

Each item on the maintenance schedule requires some mechanical knowledge. Certain items (particularly those marked * and **) may require more technical information and tools. Consult your Honda dealer.

* Should be serviced by your Honda dealer, unless you have the proper tools and service data and are mechanically qualified. Refer to the official Honda Service Manual (page 194).

** In the interest of safety, we recommend these items be serviced only by your Honda dealer.

(cont'd)

Summary of Maintenance Schedule Notes & Procedures:

NOTES:

1. At higher odometer readings, repeat at the frequency interval established here.
2. Service more frequently if the motorcycle is ridden in unusually wet or dusty areas.
3. Service more frequently if the motorcycle is ridden often at full throttle or in the rain.
4. California type only.
5. Replace every 2 years, or at indicated odometer interval, whichever comes first. Replacement requires mechanical skill. Refer to the official Honda service manual.

Maintenance Procedures:

I: inspect and clean, adjust, lubricate, or replace, if necessary
C: clean
A: adjust
L: lubricate
R: replace

		ITEM	NOTE	FREQUENCY / ODOMETER READING (Note 1) × 1,000 mi / × 1,000 km	0.6 / 1.0	4 / 6.4	8 / 12.8	12 / 19.2	16 / 25.6	20 / 32.0	24 / 38.4	Refer to page
EMISSION RELATED ITEMS	*	FUEL LINE					I		I		I	—
	*	THROTTLE OPERATION					I		I		I	—
	*	CARBURETOR CHOKE					I		I		I	—
		AIR CLEANER	2					R			R	90
	*	SUB AIR CLEANER						R			R	—
		CRANKCASE BREATHER	3			C	C	C	C	C	C	92
		SPARK PLUGS				I	R	I	R	I	R	104
	*	VALVE CLEARANCE			I		I		I		I	—
		ENGINE OIL			R		R		R		R	76
		ENGINE OIL FILTER			R		R		R		R	81
	*	ENGINE IDLE SPEED			I	I	I	I	I	I	I	102
		RADIATOR COOLANT	5				I		I		R	86
	*	COOLING SYSTEM					I		I		I	—
	*	SECONDARY AIR SUPPLY SYSTEM					I		I		I	—
	*	EVAPORATIVE EMISSION CONTROL SYSTEM	4					I			I	—

* Should be serviced by your Honda dealer, unless you have the proper tools and service data and are mechanically qualified. Refer to the official Honda Service Manual (page 194).

Maintenance Schedule

		ITEM	NOTE	FREQUENCY / ODOMETER READING (Note 1) × 1,000 mi / × 1,000 km	0.6 / 1.0	4 / 6.4	8 / 12.8	12 / 19.2	16 / 25.6	20 / 32.0	24 / 38.4	Refer to page
NON-EMISSION RELATED ITEMS		FINAL DRIVE OIL					I		I		R	93
		BRAKE FLUID	5			I	I	R	I	I	R	111
		BRAKE SHOE/PAD WEAR				I	I	I	I	I	I	113, 116
		BRAKE SYSTEM			I		I		I		I	110
	*	BRAKE LIGHT SWITCH					I		I		I	—
	*	HEADLIGHT AIM					I		I		I	—
		CLUTCH SYSTEM			I	I	I	I	I	I	I	98
		SIDE STAND					I		I		I	124
	*	SUSPENSION					I		I		I	—
	*	NUTS, BOLTS, FASTENERS			I		I		I		I	—
	**	WHEELS/TIRES			I	I	I	I	I	I	I	—
	**	STEERING HEAD BEARINGS			I		I		I		I	—

* Should be serviced by your Honda dealer, unless you have the proper tools and service data and are mechanically qualified. Refer to the official Honda Service Manual (page 194).

**In the interest of safety, we recommend these items be serviced only by your Honda dealer.

Maintenance Record

Keeping an accurate maintenance record will help ensure that your motorcycle is properly maintained. Retain detailed receipts to verify the maintenance was performed. If the motorcycle is sold, these receipts should be transferred with the motorcycle to the new owner. Make sure whoever performs the maintenance completes this record. All scheduled maintenance, including the 600 mile (1,000 km) initial maintenance, is considered a normal owner operating cost and will be charged for by your dealer. Use the space under Notes to record anything you want to remind yourself about or mention to your dealer.

Miles (km)	Odometer	Date	Performed By:	Notes
600 (1,000)				
4,000 (6,400)				
8,000 (12,800)				
12,000 (19,200)				
16,000 (25,600)				
20,000 (32,000)				

Maintenance Record

Miles (km)	Odometer	Date	Performed By:	Notes
24,000 (38,400)				
28,000 (44,800)				
32,000 (51,200)				
36,000 (57,600)				
40,000 (64,000)				
44,000 (70,400)				
48,000 (76,800)				
52,000 (83,200)				
56,000 (89,600)				
60,000 (96,000)				
64,000 (102,400)				
68,000 (108,800)				

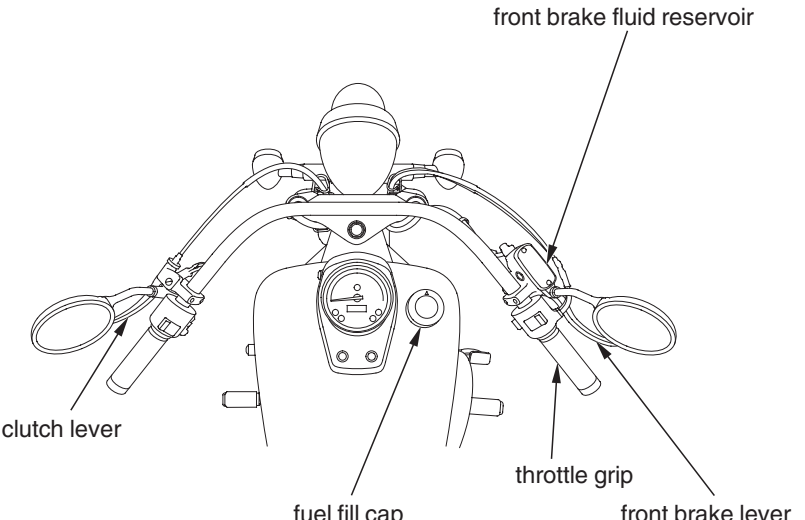
front brake fluid reservoir
clutch lever
throttle grip
fuel fill cap
front brake lever

Component Locations

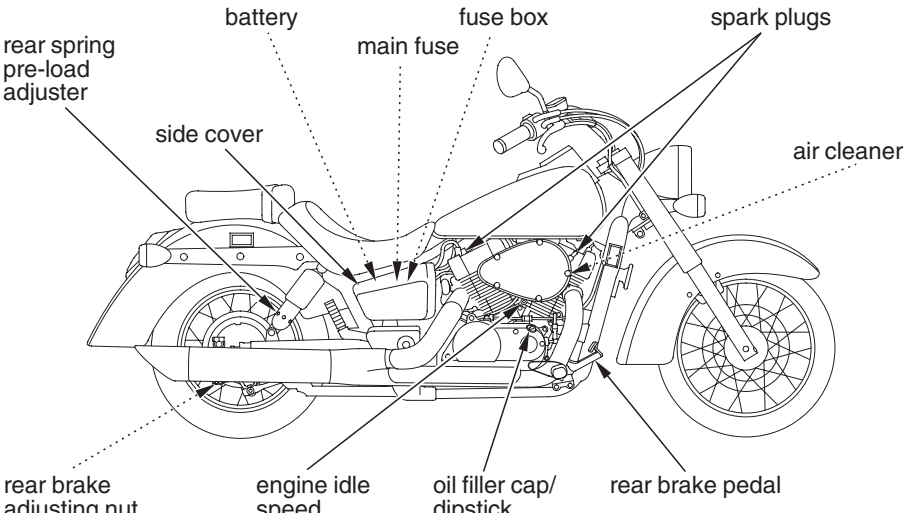

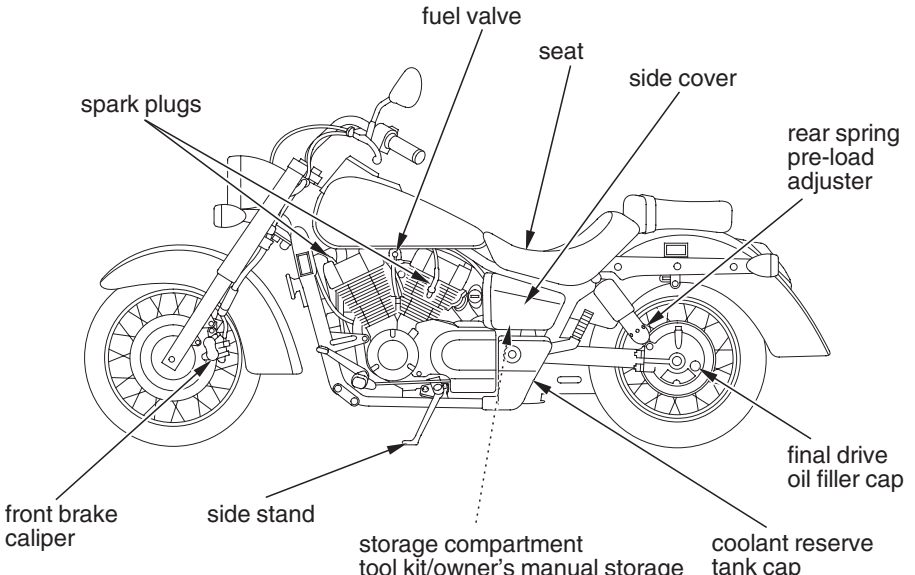
fuel valve
seat
side cover
spark plugs
rear spring
pre-load
adjuster
final drive
oil filler cap
front brake
caliper
side stand
storage compartment
tool kit/owner's manual storage
coolant reserve
tank cap

Tool Kit

The tool kit is stored in the storage compartment (page 70) behind the left side cover. Some roadside repairs, minor adjustments, and parts replacement can be performed with the tools contained in the kit.

LEFT SIDE

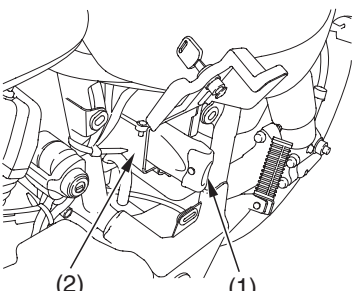

(1) tool kit (2) storage compartment

- 10 × 14 mm open end wrench
- 12 × 17 mm open end wrench
- pliers
- 4 mm hex wrench
- 5 mm hex wrench
- 6 mm hex wrench
- no. 2 Phillips screwdriver
- no. 2 screwdriver
- screwdriver handle
- spark plug wrench
- pin spanner
- tool bag
- 8 mm open end wrench

Owner's Manual Storage

Your motorcycle provides storage for the owner's manual so you'll have it with you for easy reference. Store your owner's manual (and other documents) in the plastic storage bag (1) in the storage compartment (page 70) behind the left side cover .

Be careful not to flood this area when washing your motorcycle.

LEFT SIDE

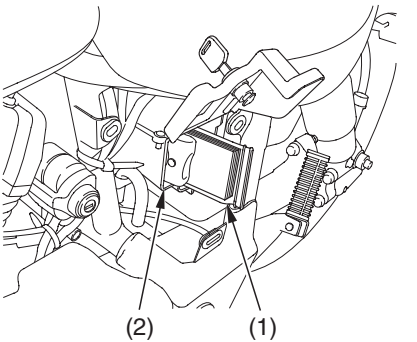

(1) owner's manual storage bag
(2) storage compartment

Storage Compartment

LEFT SIDE

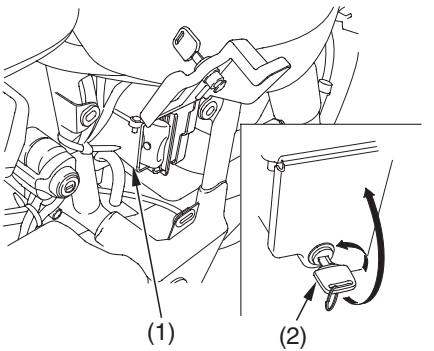

(1) storage compartment
(2) ignition key

The storage compartment (1) is located behind the left side cover (page 71).

The tool kit and owner's manual (and other documents) should be stored in the storage compartment.

To open the storage compartment (1), remove the left side cover (page 71). Insert the ignition key (2) and turn it 90 degrees counterclockwise. Open the storage compartment.

To close the storage compartment (1), close the storage compartment. Turn the ignition key 90 degrees clockwise and remove it. Install the left side cover (page 71).

Refer to *Safety Precautions* on page 54 .

The right side cover must be removed to service the fuses.

The left side cover must be removed to access the storage compartment and check the color label.

LEFT SIDE

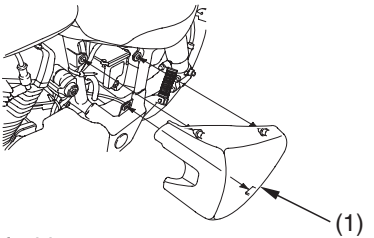

(1) left side cover

Removal

1. Grasp the cover (1) on both sides.
2. Pull out.

Installation

1. Position the cover so the three prongs on the inside of the cover are line up above their securing slots.
2. Push the cover in place.

RIGHT SIDE

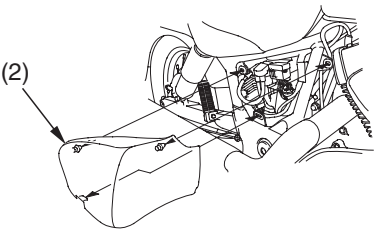

(2) right side cover

Seat Removal

Refer to *Safety Precautions* on page 54 .

The seat must be removed for battery maintenance.

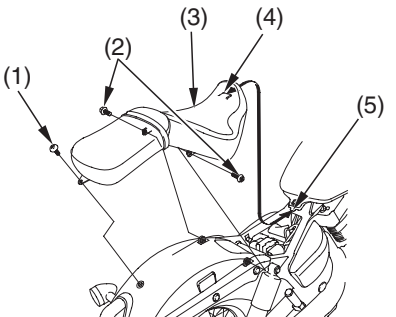

(1) seat mounting bolt A
(2) seat mounting bolts B
(3) seat
(4) tab
(5) frame cross member

Removal

1. Remove the seat mounting bolt A (1) and bolts B (2).
2. Pull the seat (3) back and up.

Installation

1. Insert the tab (4) into the frame cross member (5).
2. Tighten the seat mounting bolts securely.

Refer to *Safety Precautions* on page 54 .

Fuel Recommendation

type	unleaded
pump octane number	86 (or higher)

We recommend that you use unleaded fuel because it produces fewer engine deposits and extends the life of exhaust system components.

Your engine is designed to use any gasoline that has a pump octane number of 86 or higher. Gasoline pumps at service stations normally display the pump octane number. For information on the use of oxygenated fuels, see page 191 .

Use of lower octane gasoline can cause persistent ‘‘pinging’’ or ‘‘spark knock’’ (a loud rapping noise) which, if severe, can lead to engine damage. Light pinging experienced while operating under a heavy load, such as climbing a hill, is no cause for concern.

If pinging or spark knock occurs at a steady engine speed under normal load, change brands of gasoline. If pinging or spark knock persists, consult your Honda dealer.

(cont’d)

Fuel

Never use stale or contaminated gasoline or an oil/gasoline mixture. Avoid getting dirt, dust, or water in the fuel tank.

Fuel Capacity

Fuel tank capacity, including reserve:
3.70 US gal (14.0 ℓ)
Reserve capacity:
0.87 US gal (3.3 ℓ)

The tank should be refilled as soon as possible after switching to reserve, and the fuel valve should be returned to the ON position after refueling to avoid running out of fuel with no reserve.

Refueling Procedure

Refer to *Safety Precautions* on page 54 .

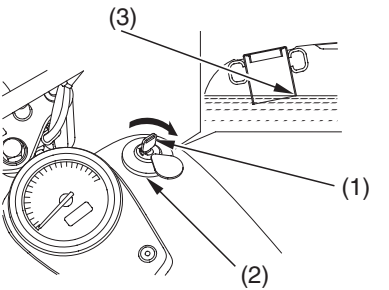

(1) ignition key
(2) fuel fill cap
(3) filler neck

1. Insert the ignition key (1) in the fuel fill cap (2) and turn it clockwise.

2. Open the cap.
3. Add fuel until the level reaches the bottom of the filler neck (3). Avoid overfilling the tank. There should be no fuel in the filler neck.

⚠ WARNING

Gasoline is highly flammable and explosive. You can be burned or seriously injured when handling fuel.

- Stop the engine and keep heat, sparks and flame away.
- Handle fuel only outdoors.
- Wipe up spills immediately.

4. After refueling, align the latch in the cap with the slot in the filler neck. Push the cap into the filler neck until it snaps and locks.
5. Remove the ignition key from the cap.
6. Turn the fuel valve ON (if it was set on RES).

Engine Oil & Filter

Engine oil quality is a major factor that affects both the performance and the service life of the engine.

Using the proper oil (page 77) and filter, and regularly checking, adding, and changing oil will help extend your engine's life. Even the best oil wears out. Changing oil helps get rid of dirt and deposits in the engine. Operating the engine with old or dirty oil can damage your engine. Running the engine with insufficient oil can cause serious damage to the engine and transmission.

Change the engine oil as specified in the maintenance schedule on page 61 .

When running in very dusty conditions, oil changes should be performed more frequently than specified in the maintenance schedule.

Oil Recommendation

API classification	SG or higher except oils labeled as energy conserving on the circular API service label
viscosity (weight)	SAE 10W-40
JASO T 903 standard	MA
suggested oil*	Pro Honda GN4 or HP4 (without molybdenum additives) 4-stroke oil (USA & Canada), or Honda 4-stroke oil (Canada only), or an equivalent motorcycle oil.

* Suggested oils are equal in performance to SJ oils that are not labeled as energy conserving on the circular API service label.

- Your motorcycle does not need oil additives. Use the recommended oil.
- Do not use oils with graphite or molybdenum additives. They may adversely affect clutch operation.
- Do not use API SH or higher oils displaying a circular API ‘‘energy conserving’’ service label on the container. They may affect lubrication and clutch performance.

NOT RECOMMENDED

OK

- Do not use non-detergent, vegetable, or castor based racing oils.

Other viscosities shown in the following chart may be used when the average temperature in your riding area is within the indicated range.

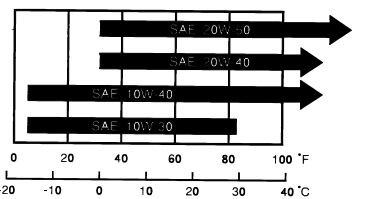

JASO T 903 standard

The JASO T 903 standard is an index to choose engine oils for 4-stroke motorcycle engines.

There are two classes: MA and MB.

Oil conforming to the standard has the following classification on the oil container.

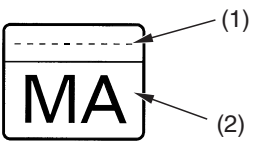

PRODUCT MEETING JASO T 903
COMPANY GUARANTEEING THIS MA PERFORMANCE:

(1) code number of the sales company of the oil
(2) oil classification

Checking & Adding Oil

Refer to *Safety Precautions* on page 54 .

RIGHT SIDE

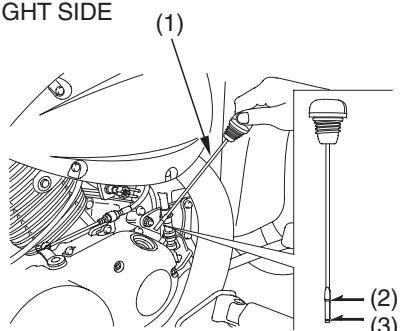

(1) filler cap/dipstick
(2) upper level mark
(3) lower level mark

1. Park your motorcycle on its side stand on a firm, level surface.
2. Start the engine and let it idle for 3－5 minutes. Make sure the low oil pressure indicator goes off. If the indicator remains on, stop the engine immediately.
3. Stop the engine and wait 2－3 minutes.
4. Remove the oil filler cap/dipstick (1) and wipe it clean.
5. Hold the motorcycle in an upright position.
6. Insert the oil filler cap/dipstick until it seats, but don't screw it in.

7. Remove the oil filler cap/dipstick and check the oil level.
   - If the oil is at or near the upper level mark (2) — you do not have to add oil.
   - If the oil is below or near the lower level mark (3) — add the recommended oil until it reaches the upper level mark. (Do not overfill.)
8. Reinstall the oil filler cap/dipstick.
9. Check for oil leaks.

Changing Engine Oil & Filter

Refer to *Safety Precautions* on page 54 .

Your motorcycle's oil filter has very specific performance requirements. Use a new genuine Honda oil filter or a filter of equal quality specified for your model.

NOTICE

Using the wrong oil filter may result in leaks or premature engine damage.

(cont'd)

Engine Oil & Filter

This procedure requires mechanical skill and professional tools such as a torque wrench and oil filter wrench, as well as a means for disposing of the drained fluid (page 143). If you do not have the skills or the tools, see your Honda dealer.

Drain the Engine Oil:

1. Park the motorcycle on its side stand on a firm, level surface.
2. If the engine is cold, start it and let it idle for 3－5 minutes. Turn the engine off. Wait 2－3 minutes for the oil to settle.
3. Place a drain pan under the crankcase drain bolt (1).
4. To drain the oil, remove the oil filler cap/dipstick, crankcase drain bolt (1), and sealing washer (2).

LEFT FRONT, UNDER ENGINE

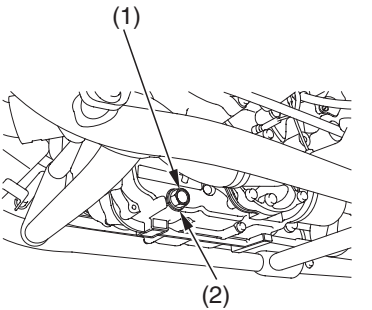

(1) crankcase drain bolt
(2) sealing washer

Install a New Oil Filter:

5. Remove the oil filter (3) with a filter wrench and let the remaining oil drain out. Discard the oil filter in an approved manner (page 143).
6. Pour the drained oil into a suitable container and dispose of it in an approved manner (page 143).

NOTICE

Improper disposal of drained fluids is harmful to the environment.

LEFT REAR, UNDER ENGINE

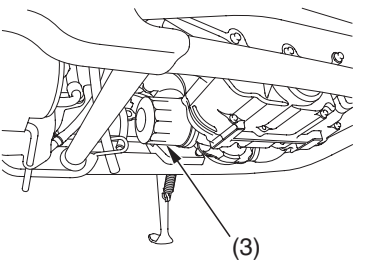

(3) oil filter

(cont'd)

7. Apply a thin coat of engine oil to the rubber seal (4) of a new oil filter.

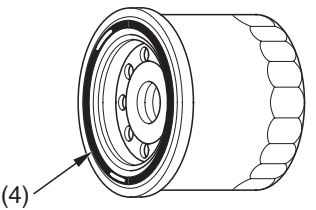

(4) oil filter rubber seal

8. Install the new oil filter and tighten it by hand.
9. Using an oil filter wrench attachment and a torque wrench, tighten the new oil filter to the specified torque:
   20 lbf·ft (26 N·m , 2.7 kgf·m)
10. Check the condition of the sealing washer on the drain bolt. Replace the washer every other time the oil is changed.
    Install the drain bolt and tighten it to the specified torque:
    22 lbf·ft (29 N·m , 3.0 kgf·m)

Add Engine Oil:

11. Fill the crankcase with the recommended oil (page 77), approximately:
    2.7 US qt (2.6 ℓ)
12. Install the oil filler cap/dipstick securely.

13. Start the engine and let it idle for a few minutes.
14. Stop the engine. Wait several minutes.
15. Hold the motorcycle upright and check that the oil level is at the upper level mark on the dipstick (page 80).
16. Check that there are no oil leaks.

If a torque wrench is not used for installation, see your Honda dealer as soon as possible to verify proper assembly.

Coolant

Your motorcycle's liquid cooling system dissipates engine heat through the coolant jacket that surrounds the cylinder and cylinder head.

Maintaining the coolant will allow the cooling system to work properly and prevent freezing, overheating, and corrosion.

Coolant Recommendation

Use Pro Honda HP coolant or an equivalent high quality ethylene glycol antifreeze containing corrosion protection inhibitors specifically recommended for use in aluminum engines. Check the antifreeze container label.

Use only distilled water as a part of the coolant solution. Water that is high in mineral content or salt may be harmful to the aluminum engine.

NOTICE

Using coolant with silicate inhibitors may cause premature wear of water pump seals or blockage of radiator passages. Using tap water may cause engine damage.

The factory provides a 50/50 solution of antifreeze and water in this motorcycle. This coolant solution is recommended for most operating temperatures and provides good corrosion protection.

Decreasing the concentration of antifreeze to less than 40% will not provide proper corrosion protection.

Increasing the concentration of antifreeze is not recommended because it decreases cooling system performance. Higher concentrations of antifreeze (up to 60%) should only be used to provide additional protection against freezing. Check the cooling system frequently during freezing weather.

Checking & Adding Coolant

Refer to *Safety Precautions* on page 54 .

LEFT SIDE

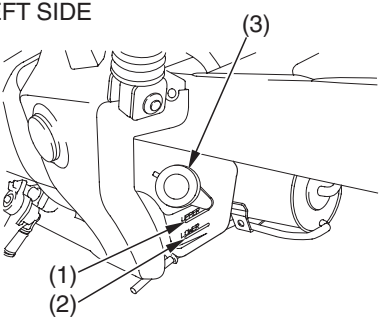

(1) UPPER level mark
(2) LOWER level mark
(3) reserve tank cap

(cont'd)

Coolant

1. With the engine at normal operating temperature, check the coolant level in the reserve tank. It should be between the UPPER (1) and LOWER (2) level marks.
   If the reserve tank is empty, or if coolant loss is excessive, check for leaks and see your Honda dealer for repair.
2. Remove the reserve tank cap (3).
   Always add coolant to the reserve tank. Do not attempt to add coolant by removing the radiator cap.
3. Add coolant to the reserve tank as required to bring the coolant level to the UPPER level mark.

Coolant Replacement

Refer to *Safety Precautions* on page 54 .

Coolant should be replaced by your Honda dealer, unless you have the proper tools and service data and are mechanically qualified. Refer to the official Honda Service Manual (page 194).

⚠ WARNING

Removing the radiator cap while the engine is hot can cause the coolant to spray out, seriously scalding you.

Always let the engine and radiator cool down before removing the radiator cap.

To properly dispose of drained coolant, refer to *You & the Environment,* page 143 .

NOTICE

Improper disposal of drained fluids is harmful to the environment.

Air Cleaner

Refer to *Safety Precautions* on page 54 .

Service the air cleaner more frequently if you ride in unusually wet or dusty areas. Your Honda dealer can help you determine the correct service interval for your riding conditions.

Your motorcycle's air cleaner has very specific performance requirements. Use a new genuine Honda air cleaner specified for your model or an air cleaner of equivalent quality.

NOTICE

Using the wrong air cleaner may result in premature engine damage.

Proper air cleaner maintenance can prevent premature engine wear or damage, expensive repairs, low engine power, poor gas mileage, and spark plug fouling.

NOTICE

Improper or lack of proper air cleaner maintenance can cause poor performance and premature engine wear.

Replacement

1. Remove the five bolts (1) and remove the air cleaner housing cover (2).
2. Remove the air cleaner (3).
3. Discard the air cleaner.
   Thoroughly clean the inside of the air cleaner case (4).
4. Install a new air cleaner.
5. Install the removed parts in reverse order of removal.

RIGHT SIDE

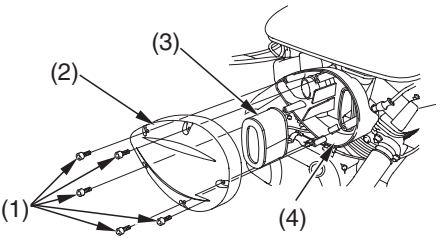

(1) bolts
(2) air cleaner housing cover
(3) air cleaner
(4) air cleaner case

Crankcase Breather

Refer to *Safety Precautions* on page 54 .

Service the crankcase breather more frequently if your motorcycle is ridden in the rain or often at full throttle. Service the breather if you can see deposits in the transparent section of the drain tube.

Draining

RIGHT FRONT

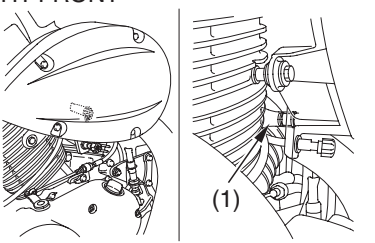

(1) crankcase breather tube

1. Place a drain pan under the crankcase breather tube (1).
2. Remove the tube to drain the deposits in it.
3. Reinstall the crankcase breather tube.

Oil Recommendation

type	hypoid gear oil
viscosity (weight)	SAE 80

Checking & Adding Oil

Refer to *Safety Precautions* on page 54 .

LEFT REAR

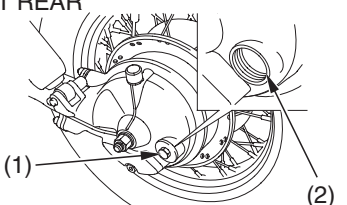

(1) oil filler cap
(2) oil filler hole

1. Place the motorcycle on its side stand on a firm, level surface.
2. Remove the oil filler cap (1).
3. Check the oil level. It should be flush with the lower edge of the oil filler hole (2).
4. If the level is low, check for leaks. Add the recommended oil through the oil filler hole until it reaches the lower edge of the opening.
5. Install the oil filler cap.

Changing Oil

Refer to *Safety Precautions* on page 54 .

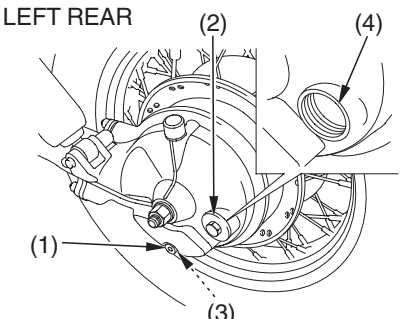

(1) oil drain bolt
(2) final drive oil filler cap
(3) sealing washer
(4) oil filler inspection hole

Change the oil with the final drive at normal operating temperature to assure complete and rapid draining.

1. Place the motorcycle on its side stand on a firm, level surface.
2. Place a drain pan under the drain bolt (1).
3. Remove the oil filler cap (2) and the drain bolt.
4. After the oil has completely drained, check that the sealing washer (3) is in good condition. Reinstall the drain bolt with its sealing washer (or a new washer, if necessary) and tighten it to the specified torque:
   9 lbf·ft (12 N·m , 1.2 kgf·m)

5. Fill the final drive with the recommended oil:
   5.4 US oz (160 cm^3)
   Make sure the final drive oil level is at the lower edge of the oil filler inspection hole (4).
6. Install the oil filler cap.

Throttle Freeplay

Refer to *Safety Precautions* on page 54 .

RIGHT HANDLEBAR

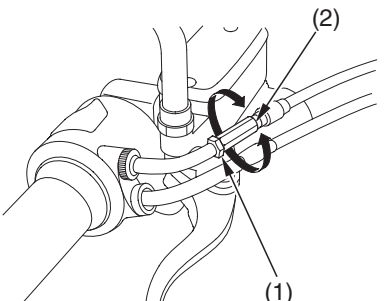

(1) lock nut (2) adjuster

Inspection

Check freeplay at the throttle grip flange.

Freeplay:

1/16－1/4 in (2－6 mm)

If necessary, adjust to the specified range.

Adjustment

1. Loosen the lock nut (1).
2. Turn the adjuster (2).
3. After adjustment, check for smooth rotation of the throttle grip from fully closed to fully open in all steering positions.

Throttle Inspection

Refer to *Safety Precautions* on page 54 .

1. Check that the throttle assembly is positioned properly and the securing bolts are tight.
2. Check for smooth rotation of the throttle from fully open to fully closed in all steering positions. If there is a problem, see your Honda dealer.

Clutch System

Your motorcycle's manually-activated, wet, multiplate clutch is part of the primary drive system. Proper freeplay adjustment allows a smooth, gradual engagement when shifting gears.

Improper freeplay adjustment can cause premature clutch wear.

Clutch Freeplay

Refer to *Safety Precautions* on page 54 .

LEFT HANDLEBAR

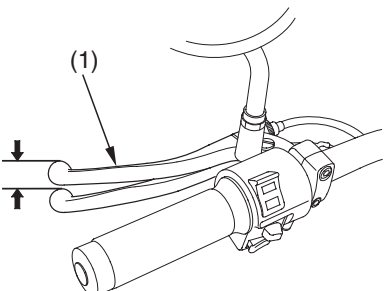

(1) clutch lever

Inspection

1. Check freeplay:
   3/8－13/16 in (10－20 mm)
   If necessary, adjust to the specified range.

Upper Adjustment

Attempt adjustment with the upper clutch cable adjuster first.

LEFT HANDLEBAR

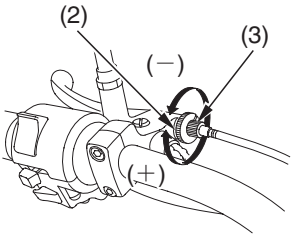

(2) upper lock nut
(3) upper clutch cable adjuster
(＋) increase freeplay
(－) decrease freeplay

1. Loosen the upper lock nut (2).
2. Turn the upper clutch cable adjuster (3) to obtain the specified freeplay.
3. Tighten the upper lock nut and check the freeplay again.

Lower Adjustment

If the upper clutch cable adjuster is threaded out near its limit — or the correct freeplay cannot be obtained — attempt adjustment with the lower clutch cable adjuster.

RIGHT SIDE

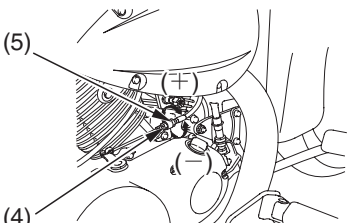

(4) lock nut (+) increase free play
(5) adjusting nut (−) decrease free play

1. Loosen the upper lock nut (2) and turn the upper clutch cable adjuster (3) all the way in (to provide maximum freeplay). Tighten the upper lock nut.
2. Loosen the lower lock nut (4).
3. Turn the lower adjusting nut (5) to obtain the specified freeplay.
4. Tighten the lower lock nut and check the adjustment.

5. Start the engine, pull the clutch lever in, and shift into gear. Make sure the engine does not stall and the motorcycle does not creep. Gradually release the clutch lever and open the throttle. Your motorcycle should move smoothly and accelerate gradually.

If you cannot get proper adjustment, or the clutch does not work properly, the cable or clutch friction discs may be worn. See your Honda dealer or refer to the official Honda Service Manual (page 194).

Other Inspections & Lubrication

- Check that the clutch lever assembly is positioned properly and the securing bolts are tight.
- Check the clutch cable for kinks or signs of wear. If necessary, have it replaced.
- Lubricate the clutch cable with a commercially-available cable lubricant to prevent premature wear and corrosion.

Engine Idle Speed

The best way to assure proper carburetion is to see your Honda dealer for regularly scheduled servicing, including carburetor adjustment.

Remember, idle speed adjustment is not a ‘‘cure-all’’ for other problems in your engine’s fuel-delivery system. Adjusting the idle will not compensate for a fault elsewhere.

The engine must be at normal operating temperature for accurate idle speed adjustment.

For information about carburetor adjustment and other parts replacement for riding at high altitude, see page 185.

Idle Speed Adjustment

Refer to *Safety Precautions* on page 54.

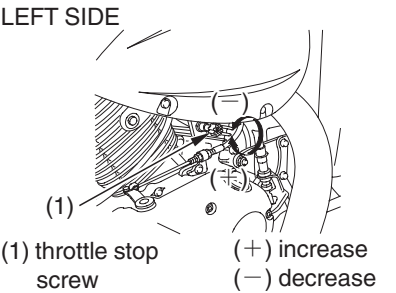

1. If the engine is cold, start it and warm it up with ten minutes of stop-and-go riding. Stop the engine.

2. Place your motorcycle on its side stand on a firm, level surface.
3. Connect a tachometer to the engine.
4. Shift into neutral. Start the engine.
5. Adjust idle speed with the throttle stop screw (1).
   Idle speed (in neutral):
   1,200 ± 100 rpm

Spark Plugs

Spark Plug Recommendation

standard spark plug	DPR6EA－9 (NGK) or X20EPR－U9 (DENSO)
for extended high speed riding	DPR7EA－9 (NGK) or X22EPR－U9 (DENSO)

Use only the recommended type of spark plugs in the recommended heat range.

NOTICE

Using spark plugs with an improper heat range can cause engine damage.

Spark Plug Replacement & Inspection

Refer to *Safety Precautions* on page 54 .

1. Clean any dirt from around the spark plug bases.
2. Disconnect the spark plug caps (1). Take care to avoid damaging the spark plug wire when disconnecting the caps.

3. Using the spark plug wrench (2) provided in the tool kit, remove the spark plugs.

LEFT SIDE

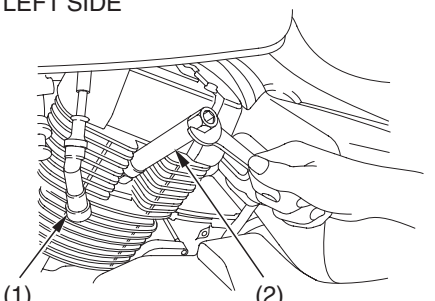

(1) spark plug cap
(2) spark plug wrench

4. Inspect the electrodes and center porcelain for deposits, corrosion, or carbon fouling. If the corrosion or deposits are heavy, replace the plug. Clean a carbon or wet-fouled plug with a plug cleaner, if available, or a wire brush.
5. Check the spark plug gap (3) of each new plug, using a wire-type feeler gauge. If adjustment is necessary, bend the side electrode (4) carefully.
   The gap should be:
   0.03－0.04 in (0.8－0.9 mm)

(cont'd)

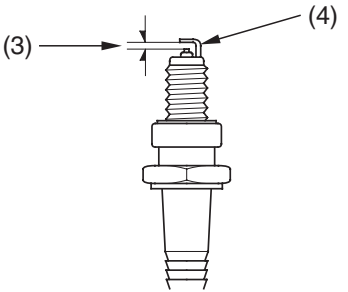

(3) spark plug gap (4) side electrode

6. With the plug washers attached, thread the spark plugs in by hand to prevent cross-threading.

7. Tighten each spark plug:
   - 1/8-1/4 turn after it seats (if the old plug is good)
   - 1/2 turn after it seats (if installing a new plug)

NOTICE

Improperly tightened spark plugs can damage the engine. If a plug is too loose, a piston may be damaged. If a plug is too tight, the threads may be damaged.

8. Reinstall the spark plug caps. Take care to avoid pinching any cables or wires.

Your front and rear suspension systems use springs and hydraulic damping devices that suspend your weight and most of the weight of your motorcycle.

The spring pre-load for your rear suspension system adjusts the amount of force required to begin compression of the spring.

The oil damper systems hydraulically control the natural compression and rebound of the suspension springs so that traction and comfort are maintained as the wheels ride over road surfaces.

Consider adjusting your rear suspension pre-load whenever you change your normal load, by adding or subtracting a passenger, cargo, or accessories, or when the road or riding conditions change.

The way you ride your motorcycle and the type of ride you want to experience can also influence your suspension needs.

Lower spring pre-load provides a softer ride and is usually preferred for light loads and smooth roads. Higher spring pre-load provides a firmer ride and is recommended for heavy loads, rough road conditions, and faster, more challenging riding.

Rear Suspension Adjustment

The rear suspension can be adjusted for rider (and passenger) weight and riding conditions by changing the spring pre-load.

Do not attempt to disassemble, service, or dispose of the damper; see your Honda dealer. The instructions found in this owner's manual are limited to adjustments of the shock assembly only.

Rear Suspension Spring Pre-load

Refer to *Safety Precautions* on page 54 .

LEFT SIDE

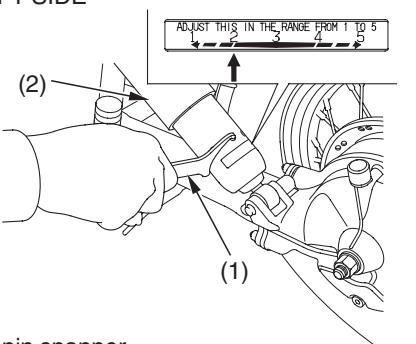

(1) pin spanner
(2) shock absorber

The spring pre-load adjuster has 5 positions for different load or riding conditions.

Use the pin spanner (1) to adjust the rear shock spring pre-load.

Position 1: for a light load and smooth road conditions.
Position 2: standard position.
Positions 3 to 5: for when the motorcycle is more heavily loaded. (Also increase spring pre-load for stiffer rear suspension.)

Make sure that both shock absorbers are adjusted to the same position.

Always adjust the shock absorber position in sequence (1-2-3-4-5 or 5-4-3-2-1). Attempting to adjust directly from 1 to 5 or 5 to 1 may damage the shock absorber.

Brakes

The hydraulic (front) and mechanically-activated drum (rear) braking systems on your motorcycle dissipate the heat generated by the friction of the brake pads on the disc (front) and the brake shoes on the drum (rear) as the wheels are slowed.

Hydraulic Front Brake

As the brake pads wear, the brake fluid level will drop. A leak in the system will also cause the level to drop.

Frequently inspect the system to ensure there are no fluid leaks. Periodically inspect the brake fluid level and the brake pads for wear.

If the brake lever freeplay does not feel within the normal range while riding, check the brake pads for wear (page 113).

Worn pads should be replaced. If the pads are not worn beyond the recommended limit, there is probably air in the brake system. See your Honda dealer to have the air bled from the system.

Drum Rear Brake

For more information, see page 114 .

Brake Fluid Recommendation

brake fluid	Honda DOT 4 Brake Fluid

The recommended brake fluid is Honda DOT 4 Brake Fluid, or any brake fluid of equal quality and performance. Use fresh brake fluid from a sealed container. Be sure to read the label before opening the sealed container. An opened container may be contaminated or may have absorbed moisture from the air.

Fluid Level Inspection

Refer to *Safety Precautions* on page 54 .

If your inspection indicates a low fluid level, have your Honda dealer add the recommended brake fluid.

Do not add or replace brake fluid, except in an emergency. If you do add fluid, have your Honda dealer check the system as soon as possible.

NOTICE

Brake fluid can damage plastic and painted surfaces. Handle with care.

Wipe up spills immediately. Avoid contact with skin or eyes. In case of contact, wash thoroughly and call a doctor immediately if it contacts your eyes.

RIGHT HANDLEBAR

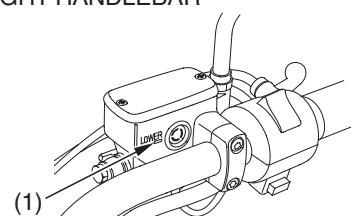

(1) Lower level mark

1. Place your motorcycle in an upright position on a firm, level surface.
2. Check the fluid level.
   Front : It should be above the LOWER level mark (1).
   If the level is at or below the LOWER level mark, check the brake pads for wear (page 113).

Worn pads should be replaced. If the pads are not worn beyond the recommended limit, have your brake system inspected for leaks.

Other Inspections

- Make sure there are no fluid leaks.
- Check for deterioration or cracks in the hoses and fittings.

Brake Pad Wear

Refer to *Safety Precautions* on page 54 .

Brake pad wear depends upon the severity of usage, the type of riding, and road conditions. Generally, the pads will wear faster on wet and dirty roads. Inspect the pads at each regular maintenance interval (page 62).

Check the cutouts (1) in each pad. If either pad is worn to the cutout, replace both pads as a set. See your Honda dealer for this service.

LEFT FRONT

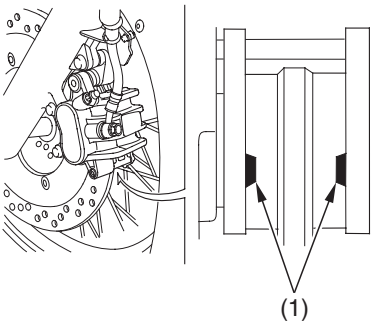

(1) cutouts

Rear Brake Pedal Freeplay

Refer to *Safety Precautions* on page 54 .

Pedal Height Adjustment

The stopper bolt is provided to allow adjustment of the pedal height.

1. Loosen the lock nut (1) and turn the stopper bolt (2).
2. Tighten the lock nut (1).

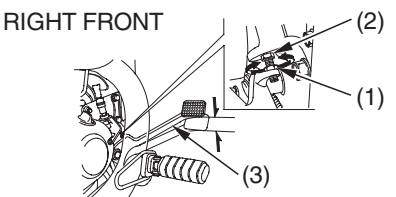

(1) lock nut
(2) stopper bolt
(3) rear brake pedal

Inspection

1. Place your motorcycle on its side stand.
2. Check freeplay by slowly depressing the brake pedal (3) until the brake starts to engage.
   Freeplay:
   13/16－1 3/16 in (20－30 mm)

   If necessary, adjust to the specified range.

Adjustment

1. Turn the rear brake adjusting nut (4). Make sure the cut-out on the adjusting nut is seated on the brake arm pin (5).
2. Apply the brake, release it, and then spin the wheel and check that it rotates freely. Repeat this procedure several times.
3. Check the freeplay. If you can't adjust the freeplay properly, see your Honda dealer.

RIGHT REAR

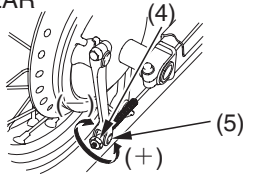

(4) adjusting nut (+) increase freeplay
(5) arm pin (−) decrease freeplay

Other Inspections

- Check that the brake pedal assembly is positioned properly and the securing bolts are tight.
- Make sure the brake rod, brake arm, spring, and fasteners are in good condition.

Brake Shoe Wear

Refer to *Safety Precautions* on page 54 .

The rear brake is equipped with an external brake wear indicator that lets you check brake wear without disassembly. Application of the brake pedal causes the arrow on the brake arm to move toward a reference mark on the brake panel.

RIGHT REAR

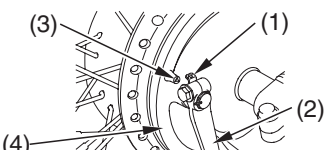

(1) arrow
(2) brake arm
(3) reference mark
(4) brake panel

1. Place your motorcycle on its side stand.
2. Apply the brake pedal and check the movement of the arrow (1) on the brake arm (2). Replace the brake shoes if the arrow aligns with the reference mark (3) on the brake panel (4) upon full application of the brake. If replacement is necessary, see your Honda dealer.

To safely operate your motorcycle, your tires must be the proper type and size, in good condition with adequate tread, and correctly inflated for the load you are carrying.

⚠ WARNING

Using tires that are excessively worn or improperly inflated can cause a crash in which you can be seriously hurt or killed.

Follow all instructions in this owner's manual regarding tire inflation and maintenance.

The following pages give detailed information on how and when to check your air pressure, how to inspect your tires for wear and damage, and our recommendations for tire repair and replacement.

Air Pressure

Refer to *Safety Precautions* on page 54 .

Properly inflated tires provide the best combination of handling, tread life, and riding comfort. Generally, underinflated tires wear unevenly, adversely affect handling, and are more likely to fail from being overheated. Overinflated tires make your motorcycle ride more harshly, are more prone to damage from road hazards, and wear unevenly.

(cont'd)

Tires

We recommend that you visually check your tires before every ride and use an air pressure gauge to measure the air pressure at least once a month or any time you think the tires might be low. Even tires that are in good condition may lose one to two psi per month if not checked and adjusted regularly.

Always check air pressure when your tires are ‘‘cold’’ — after the motorcycle has been parked for at least three hours. If you check air pressure when your tires are ‘‘warm’’ — even if your motorcycle has only been ridden for a few miles — the readings will be higher. If you let air out of warm tires to match the recommended cold pressures, the tires will be underinflated.

The recommended ‘‘cold’’ tire pressures are:

front	29 psi (200 kPa , 2.00 kgf/cm²)
rear	29 psi (200 kPa , 2.00 kgf/cm²) with less than 200 lbs (90 kg) of added weight*
	36 psi (250 kPa , 2.50 kgf/cm²) with more than 200 lbs (90 kg) of added weight*

*includes the weight of the rider, passenger, all cargo & all accessories

Inspection

Refer to *Safety Precautions* on page 54 .

Whenever you check the tire pressures, you should also look for:

- Bumps or bulges in the side of the tire or the tread. Replace any tire that has a bump or bulge.
- Cuts, slits, or cracks in the tires. Replace the tire if you can see fabric or cord.
- Nails or other foreign objects embedded in the side of the tire or tread.
- Excessive tread wear.

Also, if you hit a pothole or hard object while riding, pull to the side of the road as soon as you safely can and carefully inspect the tires for damage.

Tread Wear

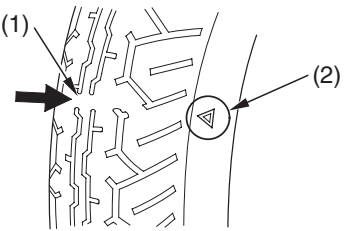

(1) wear indicator
(2) wear indicator location mark

(cont'd)

For the best performance, you should replace a tire before the tread depth at the center reaches the following limits:

front	0.06 in (1.5 mm)
rear	0.08 in (2.0 mm)

If the wear indicators are visible, replace the tire immediately as it is no longer safe.

Tire & Tube Repair

Refer to *Safety Precautions* on page 54 .

We strongly recommend that you replace, not repair, any tire that is punctured or damaged. A repaired tube will not have the same reliability as a new one, and it may fail while you are riding. And the tire will have lower speed and performance limits than a new one.

A temporary repair can sometimes be made in an emergency situation. However, since a temporary repair may not hold, you must ride very slowly, preferably without any cargo or passenger, and have the tire and tube replaced as soon as possible.
(For more information on temporary repairs, see *If You Have a Flat Tire,* page 152 .)

If you decide to only replace the tube but not the tire, you should not exceed 50 mph (80 km/h) for the first 24 hours, or 80 mph (130 km/h) at any time thereafter. In addition, you may not be able to safely carry as much weight. Repair work should be done by a professional and the wheel should be balanced before you ride.

If you have a tire and tube professionally repaired at a non-Honda facility, we recommend that you have the work checked by your Honda dealer.

Tire Replacement

Refer to *Safety Precautions* on page 54 .

The tires that came on your motorcycle were designed to match the performance capabilities of your motorcycle and provide the best combination of handling, braking, durability, and comfort.

You should replace the tires with tires of the same size, load range, and speed rating as the originals.

(cont'd)

Tires

⚠ WARNING

Installing improper tires on your motorcycle can affect handling and stability. This can cause a crash in which you can be seriously hurt or killed.

Always use the size and type of tires recommended in this owner's manual.

The recommended tires for your motorcycle are:

front	120/90－17M/C 64S DUNLOP D404FG or BRIDGESTONE G701 or CHENG SHIN M6002
rear	160/80－15M/C 74S DUNLOP D404 or BRIDGESTONE G702 or CHENG SHIN M6011R

Whenever you replace a tire, remember:

- Have the wheel balanced after the tire is installed.
- Have the tire replaced by your Honda dealer if possible.

- Have a new tube installed whenever a tire is replaced. The old tube will probably be stretched. If installed in a new tire, it could fail.

If you have a tire professionally replaced at a non-Honda facility, we recommend that you have the work checked by your Honda dealer.

Important Safety Reminders

- Do not install a radial tire on this motorcycle. Mixing bias-ply and radial tires can adversely affect handling and stability.
- Do not install car tires on this motorcycle. During installation the tire may separate from the rim with enough force to cause serious injury or death.

Side Stand

Refer to *Safety Precautions* on page 54 .

LEFT SIDE

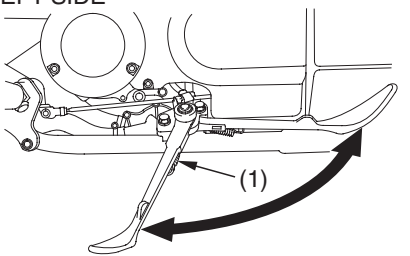

(1) side stand spring

- Check that the side stand assembly is working properly. If the side stand is stiff or squeaky, clean the pivot area and lubricate the pivot bolt with clean grease.
- Check the spring for damage or loss of tension.
- Check the side stand ignition cut-off system:
  1. Sit astride the motorcycle and put the transmission in neutral.
  2. Raise the side stand.
  3. Start the engine.
  4. Pull the clutch lever in.
  5. Shift the transmission into gear.
  6. Lower the side stand all the way.

  The engine should stop as you lower the side stand. If the engine doesn't stop, see your Honda dealer for service.

Your motorcycle has a maintenance-free type battery. You do not have to check the battery electrolyte level or add distilled water as you would with a conventional-type battery.

NOTICE

Your battery is a maintenance-free type and can be permanently damaged if the cap strip is removed.

Electrical accessories use current from the battery — even when the ignition is OFF. Limited operation also allows the battery to discharge. If you have electrical accessories on your motorcycle — or do not ride frequently, we recommend that you charge the battery frequently (see *Battery Charging,* page 128).

If you do not expect to ride your motorcycle for at least two weeks, we recommend you remove the battery — or at least disconnect the battery cables (negative cable first).

If you plan to store your motorcycle, see *Battery Storage,* page 126 .

If your battery seems weak and/or is leaking electrolyte (causing slow starting or other electrical problems), see your Honda dealer.

WARNING: Battery posts, terminals and related accessories contain lead and lead compounds. **Wash hands after handling.**

Battery Storage

Refer to *Safety Precautions* on page 54 .

If you plan to store your motorcycle, we recommend you remove the battery and store it where it can be charged at least every 30 days to maintain its service life.

If you do not remove the battery, we recommend disconnecting the battery cables (negative cable first).

You will get the best storage results from removing the battery and slow (trickle) charging it every 30 days (see *Battery Charging,* page 128).

Before you remove the battery, be sure to read all the information that follows, as well as the information on the battery label.

⚠ WARNING

The battery gives off explosive hydrogen gas during normal operation.

A spark or flame can cause the battery to explode with enough force to kill or seriously hurt you.

Wear protective clothing and a face shield, or have a skilled mechanic do the battery maintenance.

The battery is located in the battery box below the seat.

1. Remove the seat (page 72).
2. Remove the ignition control module (1).
3. Remove the battery cover (2) by removing the screw (3).

UNDER SEAT

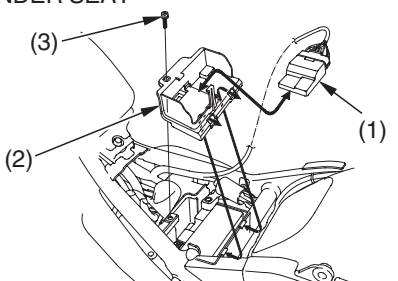

(1) ignition control module
(2) battery cover
(3) screw

4. Disconnect the negative (−) terminal lead (4) from the battery first.
5. Disconnect the positive (+) terminal lead (5).
6. Pull the battery (6) out of the battery box.

UNDER SEAT

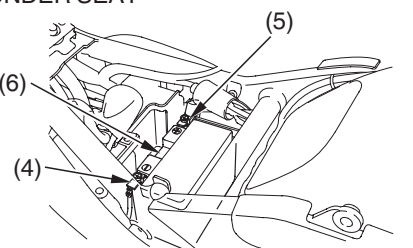

(4) negative (−) terminal lead
(5) positive (+) terminal lead
(6) battery

(cont'd)

7. Charge the battery (see following section), unless you have been riding regularly.
8. Store your battery in an easy-to-reach location off the floor, in an area protected from freezing temperatures and direct sunlight.
9. Clean the battery box after removing the battery for storage. Dry the battery box and, if paint is missing, re-paint the area.
10. Slow charge the battery (see following section) once every 30 days.

Battery Charging

Refer to *Safety Precautions* on page 54 .

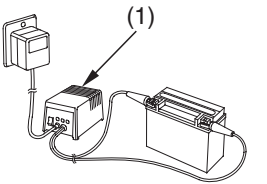

(1) “trickle” charger

Be sure to read the information that came with your battery charger and follow the instructions on the battery. Improper charging may damage the battery.

We recommend using a ‘‘trickle’’ charger (1) for home charging. These units can be left connected for long periods without risking damage to the battery. However, do not intentionally leave the charger connected longer than the time period recommended in the charger’s instructions.

Avoid using an automotive-type battery charger. An automotive charger can overheat a motorcycle battery and cause permanent damage.

Appearance Care

Frequent cleaning and polishing will keep your Honda looking newer longer. Frequent cleaning also identifies you as an owner who values your motorcycle. A clean motorcycle is also easier to inspect and service.

General Recommendations

Refer to *Safety Precautions* on page 54 .

- To clean your motorcycle, you may use:
  - water
  - a mild, neutral detergent and water
  - a mild spray and wipe cleaner/ polisher
  - a mild spray and rinse cleaner/ degreaser and water
- Avoid products that contain harsh detergents or chemical solvents that could damage the metal, paint, and plastic on your motorcycle.
- If your motorcycle is still warm from recent operation, give the engine and exhaust system time to cool off.
- Park in a shady area. Washing your motorcycle in bright sunlight may cause the finish to fade because water droplets intensify the sun's brightness. Spotting is also more likely because surface water can dry before you have time to wipe it off.
- Clean your motorcycle regularly to protect surface finishes.

- We recommend the use of a garden hose to wash your motorcycle. High pressure washers (like those at coin-operated car washes) can damage certain parts of your motorcycle.

NOTICE

High pressure water (or air) can damage certain parts of your motorcycle.

- After cleaning, inspect for damage, wear, and leaks (fuel, oil, coolant, and brake fluid).

Washing Your Motorcycle with a Mild Detergent

Refer to *Safety Precautions* on page 54 .

1. Rinse your motorcycle thoroughly with cool water to remove loose dirt.
2. Fill a bucket with cool water. Mix in a mild, neutral detergent, such as dish washing liquid or a product made especially for washing motorcycles or automobiles.
3. Wash your motorcycle with a sponge or a soft towel. As you wash, check for heavy grime. If necessary, use a mild cleaner/degreaser to remove the grime.
4. After washing, rinse your motorcycle thoroughly with plenty of clean water to remove any residue. Detergent residue can corrode alloy parts.
5. Dry your motorcycle with a chamois or a soft towel. Leaving water on the surface to air dry can cause dulling and water spots. As you dry, inspect for chips and scratches.
6. Start the engine and let it idle for several minutes. The engine heat will help dry moist areas.

7. As a precaution, ride your motorcycle at a slow speed and apply the brakes several times. This will help dry the brakes and restore normal braking performance.
   If the inside of the headlight lens appears clouded immediately after washing, it should clear after a few minutes of riding.

Spray Cleaning Your Motorcycle

Refer to *Safety Precautions* on page 54 .

Avoid using spray cleaner products on the tires or suspension components.

Suggestions for using spray cleaner(s) follow:

(cont'd)

Appearance Care

Motorcycle Condition	Recommended Cleaning
Dust and fingerprint smudges.	Apply a spray cleaner/polish and wipe the paint, chrome, glass, and clear plastic.
Light road grime.	Spray any difficult-to-reach or very dirty areas with a spray cleaner/degreaser. Rinse and dry. Apply a spray cleaner/polish and wipe with a non-abrasive cloth.
Heavy grime. Oil leaks. Brake dust.	Use a spray cleaner/degreaser. If necessary, rub with a sponge. Rinse and dry. Apply a spray cleaner/polish and wipe with a non-abrasive cloth.
Dull, corroded chrome or aluminum.	Apply a high quality chrome/aluminum polish and wipe with a non-abrasive cloth.

Finishing Touches

Refer to *Safety Precautions* on page 54 .

After washing your motorcycle, consider using a commercially-available spray cleaner/polish or quality liquid or paste wax to finish the job. Use only a non-abrasive polish or wax made specifically for motorcycles or automobiles. Apply the polish or wax according to the instructions on the container.

If a surface on your motorcycle is chipped or scratched, your Honda dealer has touch-up paint to match your motorcycle's color. Be sure to use your motorcycle's color code (page 176) when you buy touch-up paint.

If the frame has a chip that exposes the metal, first apply primer (to prevent corrosion) and then apply the touch-up paint. Several thin layers of touch-up paint are better than one thick coat.

Tips

Here's a few helpful tips on how to store and transport your Honda, and how to be an environmentally responsible motorcycle owner.

Storing Your Honda 138
Transporting Your Motorcycle 142
You & the Environment 143

Storing Your Honda

If you won't be riding for an extended period, such as during the winter, thoroughly inspect your motorcycle and correct any problem before storing it. That way, needed repairs won't be forgotten and it will be easier to get your motorcycle running again.

For more information about storage, refer to the *Honda Motorcycle Winter Storage Guide,* available from your Honda dealer (USA only).

We suggest you perform the following procedures to keep your motorcycle in top condition. These storage procedures will reduce the deterioration that can occur during storage.

Preparation for Storage

Refer to *Safety Precautions* on page 54 .

This procedure requires a means for draining and disposing of drained fuel (page 143).

1. Change the engine oil and filter (page 81).
2. Make sure the cooling system is filled with a 50/50% antifreeze solution (page 86).
3. Fill the fuel tank. Make sure the fuel fill cap is properly installed.
4. Check that the fuel valve is OFF.

5. Drain the carburetor into an approved gasoline container and dispose of it in an approved manner (page 143).
   If storage will last longer than one month, carburetor draining is important, to assure proper performance after storage.

⚠ WARNING

Gasoline is highly flammable and explosive. You can be burned or seriously injured when handling fuel.

- Stop the engine and keep heat, sparks and flame away.
- Handle fuel only outdoors.
- Wipe up spills immediately.

6. To prevent rusting in the cylinders, perform the following:
   - Remove the spark plug caps from the spark plugs. Using tape or string, secure the caps to any convenient plastic body part so that they are positioned away from the spark plugs.
   - Remove the spark plugs from the engine and store them in a safe place. Do not connect the spark plugs to the spark plug caps.
   - Pour a tablespoon (15－20 cc) of clean engine oil into each cylinder and cover the spark plug holes with a piece of cloth.

(cont'd)

- With the engine stop switch in the RUN position, press the start button several times to crank the engine and distribute the oil.
- Reinstall the spark plugs and spark plug caps.

7. Remove the battery and charge it fully. Store it in an area protected from freezing temperatures and direct sunlight. Slow charge the battery (page 128) once a month.
8. Wash and dry your motorcycle. Wax all painted surfaces. Apply rust-inhibiting oil to the chrome pieces.
9. Inflate the tires to their recommended pressures (page 117).
10. Store your motorcycle in an unheated area, free of dampness, away from sunlight, with a minimum of daily temperature variation.
11. Place your motorcycle on blocks to lift both tires off the floor.
12. Cover your motorcycle with a porous material. Avoid using plastic or similar non-breathing, coated materials that restrict air flow and allow heat and moisture to accumulate.

Removal from Storage

Refer to *Safety Precautions* on page 54 .

1. Uncover and clean your motorcycle.
2. If your motorcycle has been stored for more than four months — change the engine oil (page 81).
3. If your motorcycle has been stored for more than two months — ask your Honda dealer to drain and replace the fuel.
4. Charge the battery (page 128) as required. Install the battery.
5. Perform a pre-ride inspection (page 27), then test-ride your motorcycle at low speeds.

Transporting Your Motorcycle

If your motorcycle needs to be transported, it should be carried on a motorcycle trailer, or a truck or trailer with a flatbed area. For information about 24-hour emergency assistance, see page 201 (USA only). Do not tow your motorcycle, as towing can seriously damage the transmission.

When contacting a towing or transporting service, be sure to ask if they have a flatbed area, a loading ramp or power ramp to safely lift the motorcycle, and motorcycle tie-down straps.

You & the Environment

Owning and riding a motorcycle can be enjoyable, but you must do your part to protect nature.

Following are tips on how you can be an environmentally-responsible motorcycle owner.

- **Choose Sensible Cleaners.** Use a biodegradable detergent when you wash your motorcycle. Avoid aerosol spray cleaners that contain chlorofluorocarbons (CFCs) which damage the atmosphere's protective ozone layer. Don't throw cleaning solvents away; see the following guidelines for proper disposal.
- **Recycle Wastes.** It's illegal and thoughtless to put used engine oil in the trash, down a drain, or on the ground. Used oil, gasoline, coolant, and cleaning solvents contain poisons that can hurt refuse workers and contaminate our drinking water, lakes, rivers, and oceans. Before changing your oil, make sure you have the proper containers. Put oil and other toxic wastes in separate sealed containers and take them to a recycling center. Call your local or state office of public works or environmental services to find a recycling center in your area, and to get instructions on how to dispose of non-recyclable wastes.

Taking Care of the Unexpected

This section discusses the more common problems that can occur with your motorcycle while you're riding. It tells you how to evaluate each problem and what actions you can take to try to resume riding. If the problem cannot be safely solved, this section also gives instructions on the proper way to have your motorcycle transported.

For information about transporting your motorcycle, see page 142 .

General Guidelines 146
If Your Engine Quits or Won't Start 147
If You Have a Flat Tire 152
If Your Engine Overheats 162
If the Low Oil Pressure Indicator Lights 164
If a Fuse Blows..... 165
If You Crash 169
If You Lose Your Key 170
If Your Battery is Low (or Dead) 171

Taking Care of the Unexpected

General Guidelines

Keeping your motorcycle well-maintained is the best way to reduce the possibility of having a problem on the road. However, since problems can arise even with well-maintained machines, you may consider subscribing to an emergency roadside service plan. (USA only: For information about the Honda Rider's Club of America, see page 201 .)

Remember to take along your owner's manual, the tool kit that came with your motorcycle, and any other items (such as tire repair supplies and additional tools) that might help you solve a problem on your own.

Should you ever have a problem while riding, please follow these guidelines:

- Always put personal safety first.
- Take time to assess the situation and your options before deciding what to do.
- If the problem is relatively minor and you have the tools, supplies, and skills to make a temporary repair, be sure to have permanent repairs made as soon as possible.
- Do not continue riding if you are hurt or your motorcycle is not in safe riding condition.

Additional recommendations for specific problems follow.

If Your Engine Quits or Won't Start

Proper operation and maintenance can prevent starting and engine performance problems. In many cases, the cause of the problem may be a simple operational oversight.

If you have a problem starting the engine—or experience poor engine performance—the following information may help you. If you can't correct the problem, see your Honda dealer.

If your motorcycle won't start, listen as you press the start button. If you don't hear the starter motor turning, refer to the *Starter motor doesn't operate* symptom. If you can hear the starter motor working normally, refer to the *Starter motor works, but the engine won't start* symptom.

(cont'd)

If Your Engine Quits or Won't Start

SYMPTOM: **Starter motor doesn't operate.**	
POSSIBLE CAUSE	WHAT TO DO
ignition switch OFF	Turn the ignition switch ON.
engine stop switch OFF	Turn the engine stop switch to RUN.
transmission not in neutral	Shift into neutral.
side stand down (when transmission not in neutral)	Raise the side stand. Put the transmission in neutral, pull the clutch lever in, or raise the side stand.
blown fuse	Replace with a new fuse of the same rating (page 165).
battery lead loose	Tighten the battery lead.
dead battery	Charge the battery (page 128). If charging doesn't help, see your Honda dealer.
faulty starter motor	If all possible causes are negative, the starter motor may be faulty. See your Honda dealer.

SYMPTOM: **Starter motor works, but the engine won't start.**	
POSSIBLE CAUSE	WHAT TO DO
out of fuel	Fill the fuel tank.
flooded engine	See *Flooded Engine* (page 38).
loose or unconnected spark plug caps	Install the spark plug caps securely. If the engine still won't start, see your Honda dealer.
loose battery cables	Tighten the battery terminal bolts.
weak battery	Charge the battery (page 128). If charging doesn't help, see your Honda dealer.

(cont'd)

If Your Engine Quits or Won't Start

SYMPTOM: **Engine starts, but stalls as you shift into gear.**	
POSSIBLE CAUSE	WHAT TO DO
side stand down	Raise the side stand. Start again.

SYMPTOM: **Engine starts, but runs poorly.**	
POSSIBLE CAUSE	WHAT TO DO
idles roughly, too fast, stalls	Check engine idle adjustment (page 102). If the problem persists, see your Honda dealer.
overheating	Check the coolant temperature indicator. Refer to *If Your Engine Overheats,* page 162 .
low oil pressure	Check the low oil pressure indicator. Refer to *If the Low Oil Pressure Indicator Lights,* page 164 .
runs erratically, misfires	See your Honda dealer.
blubbers (rich fuel mixture)	See your Honda dealer.

SYMPTOM: **Engine starts, but runs poorly. (cont'd)**	
POSSIBLE CAUSE	WHAT TO DO
sooty exhaust (rich fuel mixture)	See your Honda dealer.
detonates or pings under load	If applicable, switch to the recommended octane gasoline (page 73) or change your brand of gasoline. If the problem persists, see your Honda dealer.
afterfires (backfires)	See your Honda dealer.
pre-ignition (runs on after ignition switched OFF)	See your Honda dealer.

If You Have a Flat Tire

A flat tire is always unwelcome, especially if you are far from help. If you think you are losing air, or you hit a pothole or hard object, pull safely to the side of the road so you can inspect the tires and assess the situation. (Be sure to park on a firm, level surface and use the side stand for support.) You should examine the tire treads and sidewalls for foreign objects or damage.

If a tire has major damage or the bead has come loose from the rim, there is probably not much you can do except have your motorcycle transported to a Honda dealer or other qualified service facility. (USA only: For information about 24-hour emergency roadside assistance, see page 201.) Even with a simple puncture, this may be the safest and least troublesome solution. For transporting instructions, see page 142.

Honda does not recommend that you make a temporary repair to a tube-type tire. However, if you decide to make a temporary repair so you can get to a service facility, ride cautiously at reduced speed and have the tube and tire replaced before you ride again.

⚠ WARNING

Riding your motorcycle with a temporary tire or tube repair can be risky. If the temporary repair fails, you can crash and be seriously injured or killed.

If you must ride with a temporary tire repair, ride slowly and carefully and do not exceed 30 mph (50 km/h) until the tire and tube are replaced.

Due to the uncertainty of any temporary repair, you should ride slowly (not over 30 mph, 50 km/h) and carefully (preferably without a passenger or cargo) until the tire and tube are replaced. Stop frequently and check the air pressure. If the tire is losing pressure, it may be unsafe to continue riding. As the tire gets low, it will affect the handling of your motorcycle (especially with a passenger and cargo) and it may overheat and blow out.

Should You Repair or Replace a Tire or Tube?

We strongly recommend that you replace, not repair, any tire or tube that is punctured or damaged, even if the tire has only a minor puncture. For a full discussion of repairs and replacement, see the text beginning on page 120.

Emergency Front Wheel Removal/Installation

Refer to *Safety Precautions* on page 54 .

We recommend wheel removal be done only by your Honda dealer or another qualified mechanic. Do not attempt to remove the wheel on your own. Wheel removal requires mechanical skill and professional tools.

Removal

1. Park your motorcycle on a firm, level surface.
2. Raise the front wheel off the ground by placing a support block under the engine.
3. Loosen the axle pinch bolts (1).

LEFT FRONT

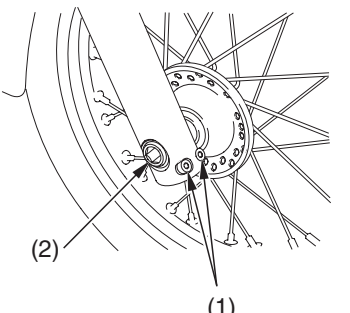

(1) axle pinch bolts
(2) front axle shaft

4. Unscrew and remove the front axle shaft (2). Remove the wheel.

Avoid depressing the brake lever when the wheel is off the motorcycle. This will force the caliper pistons out of the cylinders. The result will be loss of brake fluid. If this occurs, the brake system will require service. See your Honda dealer for this service.

Installation

1. Install the side collars and position the wheel between the fork legs. Insert the front axle shaft from the right side, through the right fork leg and wheel hub.
   - To avoid damaging the brake pads while installing the wheel, carefully fit the brake disc between the pads.
2. Tighten the front axle shaft to the specified torque:
   54 lbf·ft (74 N·m , 7.5 kgf·m)

(cont'd)

3. Operate the front brake and pump the fork several times. Check for free wheel rotation after the brake is released. Recheck the wheel if the brake drags or the wheel does not rotate freely.
4. Tighten the axle pinch bolts to the specified torque:
   16 lbf·ft (22 N·m , 2.2 kgf·m)

If a torque wrench was not used for installation, see your Honda dealer as soon as possible to verify proper assembly. Improper assembly may lead to loss of braking capability.

Emergency Rear Wheel Removal/Installation

Refer to *Safety Precautions* on page 54 .

We recommend wheel removal be done only by your Honda dealer or another qualified mechanic. Do not attempt to remove the wheel on your own. Wheel removal requires mechanical skill and professional tools.

Removal

1. Park your motorcycle on a firm, level surface.
2. Raise the rear wheel off the ground by placing a support block under the engine.
3. Remove the right footpeg (1) by removing two bolts (2) and nut (3).
4. Remove the muffler bracket bolts (4) and nuts (5).

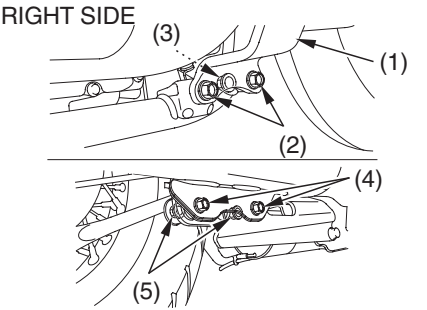

(1) right footpeg
(2) footpeg bolts
(3) footpeg nut
(4) muffler bracket bolts
(5) muffler bracket nuts

(cont'd)

5. Remove the exhaust pipe joint nuts (6).
6. Remove the right muffler.

RIGHT SIDE

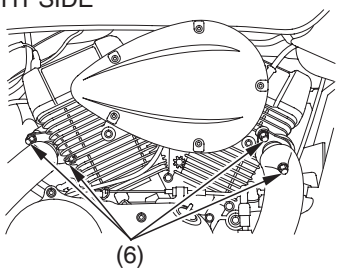

(6) exhaust pipe joint nuts

7. Remove the rear brake adjusting nut (7), disconnect the brake rod (8) from the brake arm (9) by pushing down on the rear brake pedal.
8. Disconnect the brake stopper arm (10) from the brake panel by removing the cotter pin (11), stopper arm nut (12), washer and rubber grommet.
9. Remove the axle holding bolt (13).

RIGHT REAR

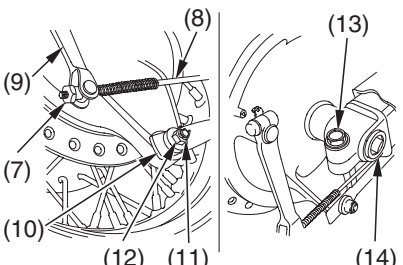

(7) brake adjusting nut
(8) brake rod
(9) brake arm
(10) brake stopper arm
(11) cotter pin
(12) stopper arm nut
(13) axle holding bolt
(14) rear axle shaft

10. While holding the other end of the rear axle shaft (14) with a wrench, remove the axle nut (15).
11. Pull the rear axle shaft out and remove the side collar.
12. Move the wheel to the right to separate it from the final drive gear case.
13. Remove the wheel.

LEFT REAR

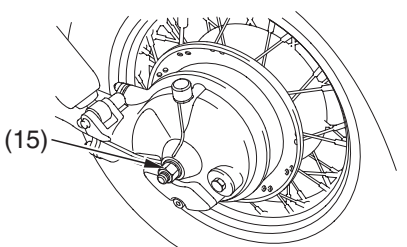

(15) axle nut

Installation

Before installing the wheel, check that the wheel hub and final drive gear splines are coated with molybdenum disulfide paste (USA only: Pro Honda Moly 60 Paste, or equivalent).

1. Position the wheel between the swingarm and the final drive gear case. Be sure the splines on the wheel hub fit into the final drive gear case.
2. Install the side collar into the brake panel.
3. Insert the rear axle shaft from the right side, through the right swingarm, brake panel, wheel hub and final drive gear case.

(cont'd)

4. Reassemble the brake stopper arm. Tighten the stopper arm nut to the specified torque:
   16 lbf·ft (22 N·m , 2.2 kgf·m)
5. Connect the brake rod to the brake arm.
6. Adjust the rear brake pedal free play (page 114).
7. Tighten the axle nut to the specified torque:
   65 lbf·ft (88 N·m , 9.0 kgf·m)
8. Tighten the axle holding bolt to the specified torque:
   20 lbf·ft (26 N·m , 2.7 kgf·m)
9. After installing the wheel, apply the brake several times. Check for free wheel rotation after the brake is released. Recheck the wheel if the brake drags or the wheel does not rotate freely.

Used cotter pins may not effectively secure fasteners. Always replace used cotter pins with new ones.

10. Reinstall the right muffler.
    - Before installing the muffler, replace the muffler gasket with a new gasket.

    Tighten the nuts and bolts to the specified torques:
    exhaust pipe joint nut:
    18 lbf·ft (25 N·m , 2.5 kgf·m)
    muffler bracket bolt:
    20 lbf·ft (26 N·m , 2.7 kgf·m)
    muffler bracket nut:
    33 lbf·ft (44 N·m , 4.5 kgf·m)
    footpeg bracket bolt and nut:
    29 lbf·ft (39 N·m , 4.0 kgf·m)

If a torque wrench was not used for installation, see your Honda dealer as soon as possible to verify proper assembly. Improper assembly may lead to loss of braking capability.

If Your Engine Overheats

Normally, the temperature of the coolant in the cooling system will rise to a level about midway between cold and boiling. Hot weather may cause the temperature to rise higher than normal. So will temporary stress such as climbing a hill. If you're stuck in stop-and-go traffic, the temperature may climb some, but the radiator fan is designed to prevent overheating. Be aware of these variations.

If the coolant temperature indicator (page 13) comes on for no apparent reason, pull safely to the side of the road. If possible, park in a shady area.

NOTICE

Continuing to ride with an overheated engine can cause serious engine damage.

- A steaming engine indicates a coolant leak. Shut the engine off and wait until the steaming stops. Look for a leak, but don't touch the engine or radiator system. Let everything cool off first.
- If there's no obvious problem, leave the engine on so the fan and coolant circulating system can continue working. Monitor the temperature indicator. The indicator may turn off after a brief stop with no load on the engine.

- Check the radiator fan.
  If the fan is not working, turn the engine off. Open the fuse box (page 166) and check the radiator fan fuse. If the fuse is blown, replace it with the proper (same rating) spare fuse. Start the engine. If the temperature indicator comes on and stays on, turn the engine off.
  If the radiator fan is working, visually check the coolant level in the reserve tank, located behind the radiator. It isn't necessary to touch the radiator system.
- If the reserve tank is low or empty, don't ride without adding coolant (page 87). After adding coolant, turn the engine on and check the temperature indicator.
  If the indicator doesn't turn off, do not ride. The engine needs repair. Transport your motorcycle to a Honda dealer (page 142).
  If the temperature drops to normal, check the coolant level. If it has gone down, add more coolant.

If you are able to resume riding, continue to monitor the temperature indicator frequently.

If there's a mild leak, you can ride for awhile, carefully watching the indicator. Be prepared to stop and add more coolant or water. If the leak is bad, transport your motorcycle to a Honda dealer (page 142).

If the Low Oil Pressure Indicator Lights

If you check your engine oil level regularly, you should never see the low oil pressure indicator while riding. Normally, it will only light momentarily when you turn the ignition switch ON. Occasionally, it may flicker at or near idling speed.

Low oil pressure may be caused by an oil leak, a low oil level, or some problem in the engine's lubrication system.

If the indicator comes on while you're riding, don't ignore it. Pull safely to the side of the road. If possible, pull the clutch lever in and coast to a stop. Stop the engine as soon as it's safe to do so.

NOTICE

Continuing to ride with low oil pressure can cause serious engine damage.

- Check for an oil leak.
- Then check the oil level. If necessary, add the recommended oil (page 77) to the upper level mark. If you must leave your motorcycle to get oil, secure it as much as possible.
- After adding oil, start the engine, and check that the low oil pressure indicator goes off. Check for a possible leak.

If the indicator goes off and there is no leak — resume riding. If there is a leak — do not ride the motorcycle until the leak is repaired by a Honda dealer.

All of the electrical circuits on your motorcycle have fuses to protect them from damage caused by excess current flow (short circuit or overload).

If something electrical on your motorcycle stops working, the first thing you should check for is a blown fuse.
Determine from the chart on the circuit fuse box cover which fuse or fuses control that component. Check those fuses first, but check all the fuses before looking elsewhere for another possible cause of the problem. Replace any blown fuses and check component operation.

- The main fuse and spare are located on the starter magnetic switch behind the right side cover.
- The circuit fuse boxes (including spare fuses) are located behind the right side cover.

Recommended Fuses

main fuse	30A
other fuses	10A, 5A

1. To prevent an accidental short circuit, turn the ignition switch OFF before checking or replacing the fuses.

(cont'd)

Main Fuse Access:

2. To access the main fuse, remove the left side cover (page 71).

RIGHT SIDE

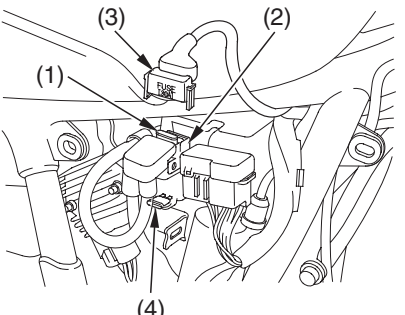

(1) main fuse
(2) starter magnetic switch
(3) wire connector
(4) spare main fuse

3. Disconnect the wire connector (3) of the starter magnetic switch (2).
4. Pull the fuse out. If the main fuse is blown, install a new main fuse (4).
5. Reconnect the wire connector.

Circuit Fuse Access:

6. Open the fuse box cover (5).
7. To check or replace a circuit fuse, pull the old fuse out of its retaining clips. Look for a burned wire inside the fuse. If the fuse is blown (6), replace it with a spare fuse (7) of the same rating or lower.

RIGHT SIDE

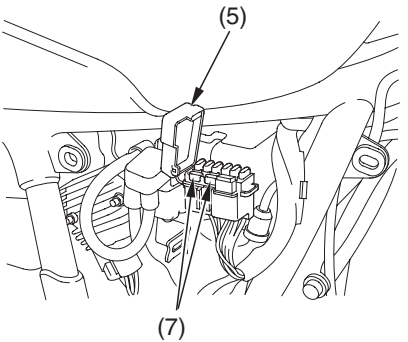

(5) fuse box cover
(7) spare fuses

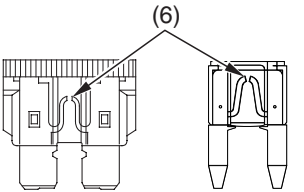

(6) blown fuse

8. Close the fuse box cover and install the right side cover.

If you do not have a replacement fuse with the proper rating for the circuit, install one with a lower rating.

NOTICE

Replacing a fuse with one that has a higher rating greatly increases the chance of damage to the electrical system.

(cont'd)

If a Fuse Blows

If you do not have a spare fuse and you cannot ride the motorcycle without fixing the problem, take a fuse of the same rating or a lower rating from one of the other circuits that you can do without temporarily.

If you replace a blown fuse with a spare fuse that has a lower rating, replace the fuse with the correct rating as soon as you can. Also remember to replace any spare fuses that were installed.

If the replacement fuse of the same rating burns out in a short time, there is probably a serious electrical problem on your motorcycle. Leave the blown fuse in that circuit and have your motorcycle checked by your Honda dealer.

If You Crash

Personal safety is your first priority after any accident. If you or anyone else has been injured, take time to assess the severity of the injuries and whether it is safe to continue riding. Call for emergency assistance if needed. Also follow applicable laws and regulations if another person or vehicle is involved in the accident.

If you decide you are capable of riding safely, carefully inspect your motorcycle for damage and determine if it is safe to ride. Check the tightness of critical nuts and bolts securing such parts as the handlebar, control levers, brakes, and wheels.

If there is minor damage, or you are unsure about possible damage, ride slowly and cautiously. Sometimes, crash damage is hidden or not immediately apparent, so you should have your motorcycle thoroughly checked at a qualified service facility as soon as possible. Also, be sure to have your Honda dealer check the frame and suspension after any serious crash.

If your motorcycle cannot be ridden, see *Transporting Your Motorcycle,* page 142 .

If You Lose Your Key

Be sure to record your key number in the Quick Reference section at the rear of the manual. You'll need this number to have a duplicate key made.

A lost key won't be a problem if you take preventative action. Store one duplicate key in a safe place at home and carry a second duplicate in your wallet.

If you lose your key and aren't carrying a duplicate, either get your spare or have one made. If you don't know your key number, call the dealer you purchased your Honda from. They may have it listed in their records. If they don't, transport your motorcycle to them or the nearest Honda dealer. The dealer will probably have to remove the ignition switch assembly to find the key number so they can make a key for you.

Jump starting is not recommended, especially if you use an automobile battery. The greater amperage of an automobile battery when the car engine is running can damage your motorcycle's electrical system.

Bump starting is also not recommended.

If you can't charge the battery or it appears unable to hold a charge, contact your Honda dealer.

Technical Information

This section contains dimensions, capacities, and other technical data, plus information on government requirements and how to break-in your motorcycle.

Vehicle Identification..... 174
Specifications 177
Break-in Guidelines..... 184
High Altitude Carburetor Adjustment and Other Parts Replacement..... 185
Emission Control Systems 186
Oxygenated Fuels..... 191

Serial Numbers

The frame, VIN, and engine serial numbers are required when you register your motorcycle. They may also be required when ordering replacement parts. You may record these numbers in the Quick Reference section at the rear of this manual.

The VIN (vehicle identification number) appears on the Safety Certification Label attached to the right side of the frame.

RIGHT SIDE

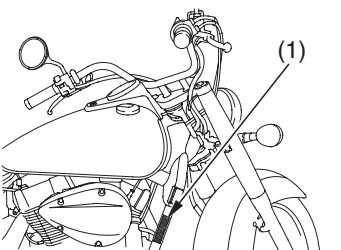

(1) VIN

The frame number (2) is stamped on the right side of the steering head.

RIGHT SIDE

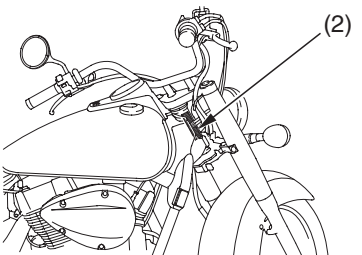

(2) frame number

The engine number (3) is stamped on the right side of the rear cylinder.

RIGHT SIDE

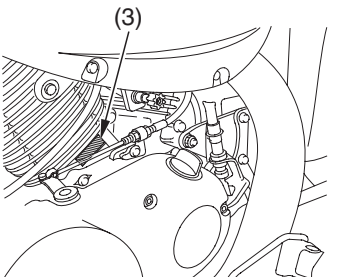

(3) engine number

Color Label & Code

The color label (1) is attached to the frame behind the left side cover. Remove the left side cover (page 71) to check the label.

The color code is helpful when ordering replacement parts. You may record the color and code in the Quick Reference section at the rear of this manual.

LEFT SIDE

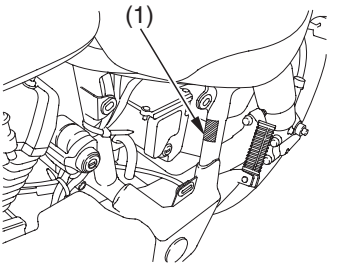

(1) color label

Dimensions	
overall length	98.8 in (2,510 mm)
overall width	37.0 in (940 mm)
overall height	42.9 in (1,090 mm)
wheelbase	64.6 in (1,640 mm)
ground clearance	5.1 in (130 mm)

Weight	
dry weight	531 lbs (241 kg) 534 lbs (242 kg) California only

Specifications

Fuel & Lubricants	
fuel recommendation	unleaded gasoline, pump octane number of 86 or higher
fuel tank capacity	3.70 US gal (14.0 ℓ) including reserve
fuel tank reserve	0.87 US gal (3.3 ℓ)
engine oil capacity	after disassembly: 3.4 US qt (3.2 ℓ) after draining: 2.6 US qt (2.5 ℓ) after draining & oil filter change: 2.7 US qt (2.6 ℓ)
engine oil recommendation	API Service Classification SG or higher except oils labeled as energy conserving on the circular API service label, SAE 10W-40, JASO T 903 standard MA, Pro Honda GN4 or HP4 (without molybdenum additives) 4-stroke oil (USA & Canada) or Honda 4-stroke oil (Canada only), or an equivalent motorcycle oil
final drive oil capacity	after draining: 5.4 US oz (160 cm^3)
cooling system, recommendation	Pro Honda HP Coolant or an equivalent high quality ethylene glycol antifreeze containing corrosion protection inhibitors specifically recommended for use in aluminum engines
cooling system, capacity	2.3 US qt (2.2 ℓ)

Capacities	
passenger capacity	Operator and one passenger
maximum weight capacity	USA: 401 lbs (182 kg) Canada: 410 lbs (186 kg) rider, passenger, all cargo and accessories

Engine Specifications	
displacement	45.4 cu-in (745 cm^3)
bore & stroke	3.11 × 2.99 in (79.0 × 76.0 mm)
compression ratio	9.6 : 1
spark plug (standard)	DPR6EA－9 (NGK) or X20EPR－U9 (DENSO)
spark plug (high speed riding)	DPR7EA－9 (NGK) or X22EPR－U9 (DENSO)
valve clearance (cold)	intake: 0.006 in (0.15 mm) exhaust: 0.008 in (0.20 mm)
spark plug gap	0.03－0.04 in (0.8－0.9 mm)
idle speed	1,200 ± 100 rpm

Specifications

Power Transmission	
primary reduction	1.763
gear ratio, 1st	2.400
2nd	1.550
3rd	1.173
4th	0.960
5th	0.852
final reduction	3.091
final drive	shaft

Chassis & Suspension	
caster	34°00′
trail	6.3 in (161 mm)
tire size, front	120/90－17M/C 64S
tire size, rear	160/80－15M/C 74S
tire pressure, front (cold)	29 psi (200 kPa , 2.00 kgf/cm²)
tire pressure, rear (cold)	29 psi (200 kPa , 2.00 kgf/cm²) －less than 200 lbs (90 kg) of added weight 36 psi (250 kPa , 2.50 kgf/cm²) －more than 200 lbs (90 kg) of added weight

Electrical	
battery	12V－10Ah or 12V－11Ah
generator	346 W/5,000 rpm

Specifications

Lights	
headlight	12V－60/55W
brake/tail light	12V－21/5W
turn signal lights	12V－21/5W (front) 12V－21W (rear)
license light	12V－5W

Fuses	
main	30A
other fuses	10A, 5A

Torque Specifications	
oil drain bolt	22 lbf·ft (29 N·m , 3.0 kgf·m)
oil filter	20 lbf·ft (26 N·m , 2.7 kgf·m)
final drive drain bolt	9 lbf·ft (12 N·m , 1.2 kgf·m)
front wheel axle	54 lbf·ft (74 N·m , 7.5 kgf·m)
front wheel axle pinch bolts	16 lbf·ft (22 N·m , 2.2 kgf·m)
rear brake stopper arm nut	16 lbf·ft (22 N·m , 2.2 kgf·m)
rear wheel axle nut	65 lbf·ft (88 N·m , 9.0 kgf·m)
rear wheel axle holding bolt	20 lbf·ft (26 N·m , 2.7 kgf·m)
exhaust pipe joint nut	18 lbf·ft (25 N·m , 2.5 kgf·m)
muffler bracket bolt	20 lbf·ft (26 N·m , 2.7 kgf·m)
muffler bracket nut	33 lbf·ft (44 N·m , 4.5 kgf·m)
footpeg bracket bolt and nut	29 lbf·ft (39 N·m , 4.0 kgf·m)

Break-in Guidelines

Help assure your motorcycle's future reliability and performance by paying extra attention to how you ride during the first 300 miles (500 km).

During this period, avoid full-throttle starts and rapid acceleration.

High Altitude Carburetor Adjustment and Other Parts Replacement

Your engine's air-fuel mixture becomes overly rich when operated at high altitudes. Above 6,500 feet (2,000 m), a rich mixture can cause driveability problems, reduce engine performance, and increase fuel consumption. To compensate, you can have the carburetor adjusted and other parts replaced for high altitude riding. See your Honda dealer.

However, the carburetor and other parts must be returned to standard factory specifications before riding again at lower altitudes (below 5,000 feet, 1,500 m). See your Honda dealer.

Sustained riding at lower altitudes with the lean high-altitude setting may cause rough idling, stalling, or engine damage from overheating.

Emission Control Systems

Exhaust Emission Requirements
The U. S. Environmental Protection Agency (EPA), the California Air Resources Board (CARB), and Transport Canada require that your motorcycle comply with applicable exhaust emissions standards during its useful life, when operated and maintained according to the instructions provided.

Noise Emission Requirements
The EPA also requires that motorcycles built after January 1, 1983 comply with applicable noise emission standards for one year or 3,730 miles (6,000 km) after the time of sale to the ultimate purchaser, when operated and maintained according to the instructions provided. (USA only)

Warranty Compliance
Compliance with the terms of the Distributor's Warranties for Honda Motorcycle Emission Control Systems is necessary in order to keep the emissions system warranty in effect. (USA only)

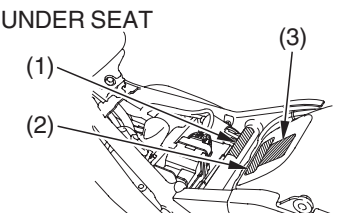

(1) vehicle emission control information label
(2) vehicle emission control information label (Canada only)
(3) vacuum hose routing diagram label (California only)

The Vehicle Emission Control Information label (1) is attached to the frame below the seat.

The Vacuum Hose Routing Diagram label (3) is attached to the rear fender under the seat (California only).

Source of Exhaust Emissions

The combustion process produces carbon monoxide (CO), oxides of nitrogen (NOx), and hydrocarbons (HC). Control of hydrocarbons and oxides of nitrogen is very important because, under certain conditions, they react to form photochemical smog when subjected to sunlight. Carbon monoxide does not react in the same way, but it is toxic.

Honda Motor Co., Ltd. utilizes lean carburetor settings and other systems to reduce carbon monoxide and hydrocarbons.

Emission Control Systems

Exhaust Emission Control System
The exhaust emission control system consist of a secondary air injection system.

No adjustments to this system should be made although periodic inspection of the components is recommended.

Secondary Air Injection System
The secondary air injection system introduces filtered air into the exhaust gases in the exhaust port. The secondary air injection system helps improve emission performance.

Evaporative Emission Control System (California only)
This motorcycle complies with the requirements of the California Air Resources Board (CARB) evaporative emission regulations. Fuel vapor from the fuel tank and carburetor is directed into the charcoal canister and air cleaner where it is absorbed and stored while the engine is stopped. When the engine is running and the purge control diaphragm valve is open, fuel vapor in the charcoal canister and air cleaner is drawn into the engine through the carburetor.

Crankcase Emission Control System
The engine is equipped with a closed crankcase system to prevent discharging crankcase emissions into the atmosphere. Blow-by gas is returned to the combustion chamber through the air cleaner and the carburetor.

Problems That May Affect Motorcycle Exhaust Emissions
If you are aware of any of the following symptoms, have the vehicle inspected and repaired by your authorized Honda motorcycle dealer.

Symptoms:
1. Hard starting or stalling after starting
2. Rough idle
3. Misfiring or backfiring during acceleration
4. After-burning (backfiring)
5. Poor performance (driveability) and poor fuel economy

Noise Emission Control System

TAMPERING WITH THE NOISE CONTROL SYSTEM IS PROHIBITED: U. S. federal law prohibits, or Canadian provincial laws may prohibit the following acts or the causing thereof: (1) The removal or rendering inoperative by any person, other than for purposes of maintenance, repair or replacement, of any device or element of design incorporated into any new vehicle for the purpose of noise control prior to its sale or delivery to the ultimate purchaser or while it is in use; or (2) the use of the vehicle after such device or element of design has been removed or rendered inoperative by any person.

AMONG THOSE ACTS PRESUMED TO CONSTITUTE TAMPERING ARE THE FOLLOWING ACTS:

1. Removal of, or puncturing the muffler, baffles, header pipes or any other component which conducts exhaust gases.
2. Removal of, or puncturing of any part of the intake system.
3. Lack of proper maintenance.
4. Replacing any moving parts of the vehicle, or parts of the exhaust or intake system, with parts other than those specified by the manufacturer.

Some conventional gasolines are being blended with alcohol or an ether compound. These gasolines are collectively referred to as oxygenated fuels. To meet clean air standards, some areas of the United States and Canada use oxygenated fuels to help reduce emissions. If you use an oxygenated fuel, be sure it is unleaded and meets the minimum octane rating requirement.
Before using an oxygenated fuel, try to confirm the fuel's contents. Some states/provinces require this information to be posted on the pump.

The following are the EPA-approved percentages of oxygenates:

ETHANOL (ethyl or grain alcohol) 10% by Volume

You may use gasoline containing up to 10% ethanol by volume. Gasoline containing ethanol may be marketed under the name ''Gasohol''.

MTBE (Methyl Tertiary Butyl Ether) 15% by Volume

You may use gasoline containing up to 15% MTBE by volume.

(cont'd)

Oxygenated Fuels

METHANOL (methyl or wood alcohol)
5% by Volume

You may use gasoline containing methanol containing up to 5% methanol by volume as long as it also contains cosolvents and corrosion inhibitors to protect the fuel system. Gasoline containing more than 5% methanol by volume may cause starting and/or performance problems. It may also damage metal, rubber, and plastic parts of your fuel system.

If you notice any undesirable operating symptoms, try another service station or switch to another brand of gasoline.

Fuel system damage or performance problems resulting from the use of an oxygenated fuel containing more than the percentages of oxygenates mentioned above are not covered under warranty.

Oxygenated fuels can damage paint and plastic. Be careful not to spill fuel when filling the fuel tank. Wipe up any spills immediately.

NOTICE

Oxygenated fuels can damage paint and plastic. Damage caused by spilled fuel is not covered by warranty.

Consumer Information

This section contains information on your warranty and how to get an official Honda service manual.

Authorized Manuals 194
Warranty Coverage 197
Warranty Service 198
Contacting Honda..... 199
Your Honda Dealer 200
The Honda Rider's Club
(USA only) 201
Reporting Safety Defects
(USA only) 202

Authorized Manuals

The Service Manual (Publication Item No. 61MEG00) used by your authorized Honda dealer is available from Helm, Inc. (USA only, Canada: See your Honda dealer to order authorized manuals.)

Also available, but not necessary, to service your model is the Honda Common Service Manual (Publication No. 61CM001), which explains theory of operation and basic service information for various systems common to all Honda motorcycles, motor scooters and ATVs.

These Honda manuals are written for the professional technician, but most mechanically-capable owners should find them easy to use if they have the proper tools and observe proper safety standards. Special Honda tools are necessary for some procedures.

Publication Item No.	Description	Price Each*
61MEG00	2004 VT750C Service Manual	$60.00
61CM001	Common Service Manual	$48.00
31MEG600	2004 VT750C Owner's Manual	$16.00
** Prices are subject to change without notice and without incurring obligation.*		

Order On-Line: www.helminc.com

Order Toll Free: 1-888-CYCLE93 (1-888-292-5393)

(NOTE: For Credit Card Orders Only)

Monday — Friday 8:00 AM — 6:00 PM EST

OR

By completing this form you can order the materials desired. You can pay by check or money order, or charge to your credit card. Mail to Helm, Inc. at the address shown on the back of this order form (USA only).

Canada: See your Honda dealer to order authorized manuals.

Publication Item No.	Item Description	Qty.	Price Each*	Total Price
*Prices are subject to change without notice and without incurring obligation.		Sub Total		
		Mich. Purchasers Add 6 % Sales Tax		
Orders are mailed within 10 days. Please allow adequate time for delivery.		Handling Charge		$4.00
		Grand Total		

SHIP TO

NOTE: Dealers and Companies please provide dealer or company name, and also the name of the person to whose attention the shipment should be sent.

Customer Name _____ Attention _____

Street Address - No P. O. Box Number _____ Apartment Number _____

City _____ State _____ Zip Code _____

Daytime Telephone Number ( ) _____

PAYMENT

☐ Check or money order enclosed payable to Helm Inc. U.S. funds only. Do not send cash.

☐ Check here if your billing address is different from the shipping address shown above.

☐ MasterCard

☐ VISA

☐ Discover

Account Number ☐☐☐☐ ☐☐☐☐ ☐☐☐☐ ☐☐☐☐

Expiration: Mo. Yr. ☐ — ☐

Customer Signature _____ Date _____

These Publications cannot be returned for credit without receiving advance authorization within 14 days of delivery. On returns, a restocking fee may be applied against the original order.

HELM P.O. BOX 07280, DETROIT, MICHIGAN 48207

Warranty Coverage

Your new Honda is covered by these warranties:

- Motorcycle Limited Warranty
- Exhaust Emission Warranty
- Noise Control Warranty

There are responsibilities, restrictions, and exclusions which apply to these warranties. Please read the Warranties Booklet given to you by your Honda dealer at the time of purchase. Be sure to keep your Honda owner's card with your Warranties Booklet (USA only).

It is important to realize that your warranty applies to defects in material or workmanship of your Honda. Your warranty coverage does not apply to normal wear or deterioration associated with using the motorcycle.

Your warranty coverage will not be voided if you choose to perform your own maintenance. However, you should have the proper tools and service information and be mechanically qualified. Failures that occur due directly to improper maintenance are not covered.

Almost all of your warranty coverage can be extended through the Honda Protection Plan (USA only). For more information, see your Honda dealer.

Warranty Service

Please remember that recommended maintenance interval servicing is not included in your warranty coverage. Additionally, your warranty does not apply to the normal wear of items (such as brakes, tires, etc.).

If you believe you have a problem with your motorcycle, call the service department of your Honda dealer. Make an appointment for an inspection and diagnosis. Remember, as the owner of the motorcycle, you will be asked to authorize that inspection. Your dealer will give you the results of the inspection. If the problem is covered under warranty, your dealer will perform the warranty repairs for you.

If you have questions about warranty coverage or the nature of the repair, it is best to talk to the service manager of your Honda dealer.

Sometimes, in spite of the best intentions of all concerned, a misunderstanding may occur. If you aren't satisfied with your dealer's handling of the situation, we suggest you discuss your problem with the appropriate member of the dealership's management team. If the problem has already been reviewed with the Service Manager, Parts Manager, Sales Manager, etc., contact the Owner of the dealership or their designated representative.

Contacting Honda

Your owner's manual was written to cover most of the questions you might ask about your Honda. Any questions not answered in the owner's manual can be answered by your Honda dealer. If your dealer doesn't have the answer right away, they will get it for you.

If you have a difference of opinion with your dealer, please remember that each dealership is independently owned and operated. That's why it's important to work to resolve any differences at the dealership level.

If you wish to comment on your experiences with your Honda or with your dealer, please send your comments to the following address (USA only):

Motorcycle Division, American Honda Motor Co., Inc., P.O. Box 2220, Torrance, CA 90509-2220, mailstop: 100-4W-5B, telephone: (310) 532-9811.

Canada: Refer to the Warranties Booklet that was supplied with your vehicle.

Please include the following information in your letter:

- name, address, and telephone number
- product model, year, and frame/VIN serial number
- date of purchase
- dealer name and address

We will likely ask your Honda dealer to respond, or possibly acknowledge your comments directly.

Your Honda Dealer

Once you purchase your new Honda, get familiar with the organization of your Honda dealer so you can utilize the full range of services available.

The service department is there to perform regular maintenance and unexpected repairs. It has the latest available service information from Honda. The service department will also handle warranty inspections and repairs.

The parts department offers Genuine Honda parts, Pro Honda products, Hondaline accessories (USA only), and Honda accessories and products (Canada only). The same quality that went into your Honda can be found in Genuine Honda replacement parts. You'll also find comparable quality in the accessories and products available from the parts department.

The sales department offers the Honda Protection Plan to extend almost all of your warranty coverage (USA only). Your Honda dealer can inform you about competition and other riding events in your area. You'll also find that your dealer is a source of information about American Honda's Rider Education Centers and the Honda Rider's Club of America (USA only).

We're sure you'll be as pleased with the service your Honda dealer continues to provide after the sale as you are with the quality and dependability of your Honda.

The Honda Rider's Club (USA only)

One of the best ways to get the most enjoyment from owning your Honda is to join the Honda Rider's Club of America (HRCA). Your purchase of a new motorcycle, scooter or ATV from a participating Honda dealer entitles you to a complimentary one-year membership. The HRCA has hundreds of dealer-sponsored chapters throughout the USA. Some of the HRCA membership benefits include:

- 24-hr. emergency roadside assistance for your Honda or transport vehicle.
- Transportation for your Honda or transport vehicle to the nearest Honda dealer or service facility if roadside assistance can't get you going again.
- Reimbursement (to $75) for motorcycle and scooter rider training from the Motorcycle Safety Foundation. Free ATV rider training is available from the Specialty Vehicle Institute of America with the purchase of a new Honda ATV.
- A subscription to *Honda Red Rider,* a bi-monthly insider's magazine for all members.
- Special members-only HRCA website.
- Discounts from HRCA partners for both on and off-road riding schools and adventure packages.
- Hospitality at national events.
- Optional insurance, club pin, patch, etc.

Contact your Honda dealer for more information or call: 1-800-847-HRCA. For a complete list of all HRCA benefits and services, refer to your HRCA membership benefits manual or visit our website at www.honda.com.

Reporting Safety Defects (USA only)

If you believe that your vehicle has a defect which could cause a crash or could cause injury or death, you should immediately inform the National Highway Traffic Safety Administration (NHTSA) in addition to notifying American Honda Motor Co., Inc.

If NHTSA receives similar complaints, it may open an investigation, and if it finds that a safety defect exists in a group of vehicles, it may order a recall and remedy campaign. However, NHTSA cannot become involved in individual problems between you, your dealer, or American Honda Motor Co., Inc.

To contact NHTSA, you may either call the Auto Safety Hotline toll-free at 1-800-424-9393 (or 366-0123 in Washington, D.C. area) or write to: NHTSA, U.S. Department of Transportation, Washington, D.C. 20590.

You can also obtain other information about motor vehicle safety from the Hotline.

Table of Contents

The following presents the contents of each section of your owner's manual.

MOTORCYCLE SAFETY 1
Important Safety Information 2
Accessories & Modifications..... 5
Safety Labels 7

INSTRUMENTS & CONTROLS 9
Component Locations 10
Indicators 13
Controls & Features
Fuel Valve..... 17
Choke Knob..... 18
Ignition Switch 18
Start Button..... 19
Engine Stop Switch 20
Headlight Dimmer Switch 20
Turn Signal Switch..... 21
Horn Button 21
Odometer/Tripmeter Select and Reset Button 21

BEFORE RIDING..... 23
Are You Ready to Ride ? 24
Protective Apparel..... 24
Rider Training 26
Is Your Motorcycle Ready to Ride ? 27
Pre-ride Inspection 27
Load Limits & Guidelines..... 30
Loading..... 30
Load Limits 31
Loading Guidelines 31

Table of Contents

BASIC OPERATION & RIDING..... 33
Safe Riding Precautions..... 34
Starting & Stopping the Engine 35
Preparation..... 35
Starting Procedure 36
Flooded Engine..... 38
How to Stop the Engine 39
Shifting Gears..... 40
Braking 42
Parking..... 44
Riding with a Passenger or Cargo..... 47

SERVICING YOUR HONDA 49
Before You Service Your Honda
The Importance of Maintenance..... 52
Maintenance Safety..... 53
Important Safety Precautions..... 54
Periodic Maintenance..... 56
Maintenance Schedule 58
Maintenance Record..... 63

Service Preparations
Component Locations 65
Tool Kit..... 68
Owner's Manual Storage..... 69
Storage Compartment..... 70
Side Cover Removal..... 71
Seat Removal..... 72

(cont'd)

Table of Contents

SERVICING YOUR HONDA (cont'd)
Service Procedures

Fluids & Filters
Fuel 73
Engine Oil & Filter..... 76
Coolant..... 86
Air Cleaner 90
Crankcase Breather..... 92
Final Drive Oil..... 93

Engine
Throttle 96
Clutch System..... 98
Engine Idle Speed..... 102
Spark Plugs 104

Chassis
Suspension 107
Brakes 110
Tires 117
Side Stand 124

Electrical
Battery..... 125

Appearance Care 130

TIPS..... 137
Storing Your Honda 138
Transporting Your Motorcycle 142
You & the Environment 143

TAKING CARE OF THE UNEXPECTED 145
General Guidelines 146
If Your Engine Quits or Won't Start ... 147
If You Have a Flat Tire 152
If Your Engine Overheats 162
If the Low Oil Pressure Indicator Lights 164
If a Fuse Blows..... 165
If You Crash 169
If You Lose Your Key 170
If Your Battery is Low (or Dead) 171

TECHNICAL INFORMATION 173
Vehicle Identification..... 174
Specifications 177
Break-in Guidelines..... 184
High Altitude Carburetor Adjustment and Other Parts Replacement..... 185
Emission Control Systems 186
Oxygenated Fuels 191

CONSUMER INFORMATION 193
Authorized Manuals 194
Warranty Coverage 197
Warranty Service 198
Contacting Honda..... 199
Your Honda Dealer 200
The Honda Rider's Club (USA only) 201
Reporting Safety Defects (USA only) 202

TABLE OF CONTENTS 204

INDEX 208

QUICK REFERENCE

Index

A

accessories 5
air pressure, tires..... 117
altitude, high 185
American Honda, contacting..... 199
apparel, protective 24
appearance care 130
Authorized Manuals 194

B

battery 125
brakes,
  fluid..... 111
  pad wear..... 113
  rear pedal freeplay..... 114
  shoe wear 116
braking 42
break-in guidelines 184

C

capacity, fuel 74
carburetor, altitude adjustment..... 185
care, appearance 130
choke knob..... 18
cleaning, appearance care 130
clutch system 98
color label 176
compartment,
  owner's manual 69
  storage..... 70
  tool kit..... 68
component locations,
  indicators and controls 10
  maintenance..... 65
consumer information 193

coolant 86
coolant temperature indicator 15
customer service 199

D

defects, safety 202
drive, final 93

E

emission control systems 186
engine,
  flooded 38
  idle speed 102
  low oil pressure 164
  number 175
  oil 76
  overheats 162
  pinging 73
  starting 35
  stop switch 20
  stopping 39
  won't start 147
environment 143

F

final drive 93
flat tire 152
flooded engine 38
frame number 175
fuel,
  oxygenated 191
  recommendation 73
  tank capacity 74
  valve 17
fuses 165

G

gap, spark plug 105
gasohol 191
gasoline 73

H

headlight dimmer switch 20
helmet holder 45
high altitude carburetor adjustment 185
high beam indicator 15
Honda,
  contacting 199
  Rider's Club 201
  dealer 200
Honda service manual 194
horn button 21

I

identification, vehicle 174
idle speed, engine 102
ignition cutoff system, side stand 35
ignition switch 18
indicators 13
inspection, pre-ride 27

K

key, lost 170
kit, tool 68

L

labels, safety 7
lamp check 14
limit, weight 31

load limits 31
loading guidelines..... 31
location, components,
indicators & controls 10
maintenance..... 65
lock, steering..... 44

M

maintenance,
importance 52
periodic 56
record 63
safety..... 53
schedule 58
manual, service 194
maximum weight limit 31
modifications 6

N

numbers, serial..... 174

O

odometer 16
odometer/tripmeter select and
reset button..... 21
oil,
engine..... 76
final drive 93
low pressure..... 164
operating controls 17
overheat, engine..... 162
owner's manual storage..... 69
oxygenated fuels..... 191

P

parking 44
pinging, engine 73
plugs, spark 104
pre-load, suspension,
  rear 109
pre-ride inspection 27
problems, unexpected 145
protective apparel 24

R

removal,
  seat 72
  side cover 71
reporting safety defects 202
rider training 2, 26
Rider's Club, Honda 201
riding,
  basic operation 33
  clothing 24
  precautions 34
  safety 2
  safety precautions 34
  with passenger or cargo 47

S

safety,
  important precautions 54
  labels 7
  reporting defects 202
  riding precautions 34
schedule, maintenance 58
seat removal 72
serial numbers 174
service,
  customer 199

manuals 194
warranty 198
shifting gears 40
side cover removal..... 71
side stand 124
side stand ignition cutoff system 35
spark knock..... 73
spark plugs 104
specifications 177
speedometer 15
stand, side 124
start button 19
starting,
engine..... 35
troubleshooting 147
steering lock..... 44
stop switch, engine 20
stopping engine..... 39
storage,
motorcycle 138
owner's manual 69
compartment 70
suspension,
rear suspension adjustment 108
rear suspension spring pre-load..... 108
switch,
headlight dimmer..... 20
ignition 18
turn signal 21

T

theft prevention tips..... 46
throttle 96
tires,
air pressure..... 117
flat 152
replacing 121

(cont'd)

tool kit 68
training, rider 2, 26
transporting your motorcycle 142
tripmeter..... 16
trouble, unexpected 145
troubleshooting, starting..... 147
turn signal indicator..... 15

V

valve, fuel 17
vehicle identification no. (VIN)..... 174

W

warranty,
  coverage..... 197
  extended..... 197
  service..... 198
washing your motorcycle 132
weight limit..... 31
wheels,
  front removal..... 154
  rear removal..... 157

The following is a brief, but important collection of information you need to know about your Honda. You'll also find space to record important notes.

How To Avoid Costly Repairs

The engine of your Honda can be the most expensive component to repair. Proper maintenance, especially the use of the recommended fluids and filters, prevents premature wear and damage.

Frequent causes of costly repairs are:

- Engine oil: insufficient quantity, improper oil.
- Air cleaner: dirty, leaking because of improper installation (poor seal).

Record important information on the following page:

Quick Reference

VIN/Frame No.	
Engine No.	
Frame No.	
Ignition Key No.	
Color Label	
Owner's Name	
Address	
City/State	
Phone	
Dealer's Name	
Address	
City/State	
Phone	
Service Mgr.	

Scheduled Maintenance	Initial: 600 miles (1,000 km) Regular: every 4,000 miles (6,400 km)
Pre-ride Inspection	Check the following items each time before you ride (page 27): tires, leaks, loose parts, throttle, brakes, indicators, lights.
Periodic Checks	Check the following items monthly (page 56): tires, fluids, lights, freeplay, fuses, nuts & bolts.
Fuel/Capacity	unleaded gasoline, pump octane number 86 or higher 3.70 US gal (14.0 ℓ) reserve: 0.87 US gal (3.3 ℓ)
Engine Oil	API Service Classification SG or higher except oils labeled as energy conserving on the circular API service label, SAE 10W-40, JASO T 903 standard MA, Pro Honda GN4 or HP4 (without molybdenum additives) 4-stroke oil or equivalent
Maximum Weight Capacity	401 lbs (182 kg) 410 lbs (186 kg) Canada rider, passenger, all cargo and accessories

Quick Reference

Tires	Front:	120/90－17M/C 64S	DUNLOP D404FG BRIDGESTONE G701 CHENG SHIN M6002
	Rear:	160/80－15M/C 74S	DUNLOP D404 BRIDGESTONE G702 CHENG SHIN M6011R
Tire Pressure (cold)	Front:	29 psi (200 kPa , 2.00 kgf/cm²)	
	Rear:	29 psi (200 kPa , 2.00 kgf/cm²) with less than 200 lbs (90 kg) of added weight 36 psi (250 kPa , 2.50 kgf/cm²) with more than 200 lbs (90 kg) of added weight	
Spark Plugs	standard:	DPR6EA－9 (NGK) or X20EPR－U9 (DENSO)	
	high speed riding:	DPR7EA－9 (NGK) or X22EPR－U9 (DENSO)	
Coolant	ethylene glycol antifreeze (silicate-free) for aluminum engines in 50/50 solution with Pro Honda HP Coolant or an equivalent distilled water		
Fuses	main:	30A	
	other:	10A, 5A	
Final Drive Oil	Hypoid Gear Oil SAE 80		